PART O-01 ~ O-14

Slot Wide
● Shielded ○ non-Shielded
Switching Distance Sn mm
Housing Material
● With LED ○ Without LED

Dimensions (unit: mm)

Operating Voltage
Ripple
No Load Current
Max. Load Current
Leakge Current
Surge Current
Min. Load Current
Voltage Drop
Switching Frequency
Switch Point With Fe Test Plate
Switching Hysteresis
Repeat Accuracy
Protection Category
Operating Temperature
Temperature Drift
Test Plate(Min. dimentions Fe and non Fe)
Reverse Polarity Protection
Short Circuit Protection
Overload Trip Point
EMC
Shock / Vibration

DC 3 wire 10-30V NPN N.O.
DC 3 wire 10-30V NPN N.C.
DC 3 wire 10-30V PNP N.O.
DC 3 wire 10-30V PNP N.C.
DC 4 wire 10-30V Changeover PNP (N.O. & N.C.)
DC 4 wire 10-30V Changeover NPN (N.O. & N.C.)
DC 2 wire 10-60V N.O.
DC 2 wire 10-60V N.C.
DC 3 wire 10-55v NPN N.O.
DC 3 wire 10-55v NPN N.C.
DC 3 wire 10-55v PNP N.O.
DC 3 wire 10-55v PNP N.C.
AC 2 wire 20-250V N.O.
AC 2 wire 20-250V N.C.
AC/DC 2 wire 20-250V N.O.
AC/DC 2 wire 20-250V N.C.
NAMUR

Remark

Cable 2M (PVC)
Weight

Please put each catalog page in the blank. The specification on the left will help your reading.

SLOT TYPE INDUCTIVE PROXIMITY SWITCH

■ Principle of operation

Since the electromagnetic field of this type sensors is concentrated between two axially positioned coil,the sensor will operate when a metallic target approach with its center maintained on the axis. The perpendicular switching axis ensure high repeatability precision in insertion type sensing applications,even when slight deviations along the approach axis occur.

■ Applications

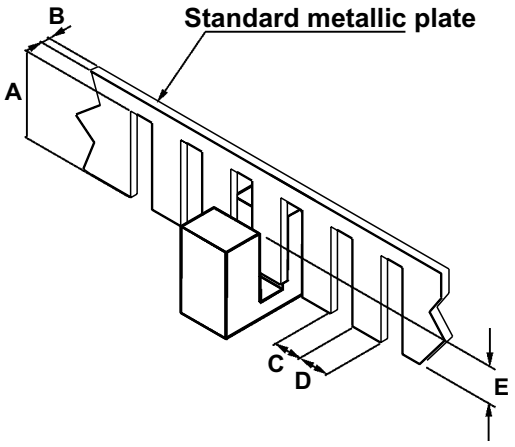

Model \ Size	A	B	C	D	E
UUP2-U3.510 ···	11mm	0.2mm	2.0mm	4.0mm	9.0mm
UUP2-U0509 ···	11mm	0.2mm	3.0mm	5.0mm	9.0mm
UUP2-U0519 ··· HUP2-U0519 ...	17mm	0.2mm	6.0mm	9.0mm	15.0mm
UUP2-U1032 ··· HUP2-U1032 ···	28mm	0.5mm	8.0mm	15.0mm	25.0mm
UUP2-U1542 ··· HUP2-U1542 ···	33mm	0.5mm	12.0mm	18.0mm	30.0mm
UUP2-U3080 ··· HUP2-U3080 ···	50mm	0.5mm	18.0mm	27.0mm	47.0mm

■ Mounting considerations

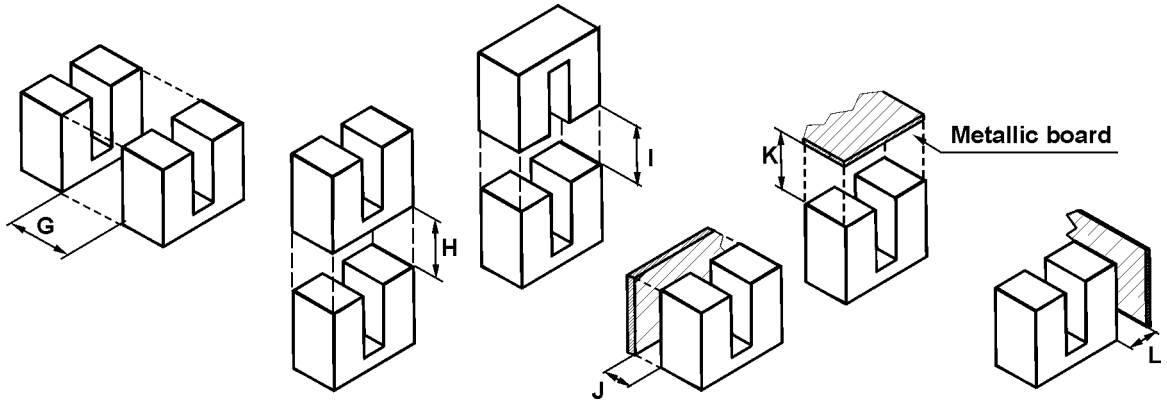

Model \ Size	G	H	I	J	K	E
UUP2-U3.510 ···	**>15mm**	**>5mm**	**>15mm**	**>0mm**	**>0mm**	**>0mm**
UUP2-U0509 ···	**>10mm**	**>0mm**	**>5mm**	**>0mm**	**>0mm**	**>0mm**
UUP2-U0519 ··· HUP2-U0519 ...	**>20mm**	**>0mm**	**>5mm**	**>0mm**	**>0mm**	**>0mm**
UUP2-U1032 ··· HUP2-U1032 ...	**>25mm**	**>5mm**	**>25mm**	**>5mm**	**>5mm**	**>5mm**
UUP2-U1542 ··· HUP2-U1542 ···	**>30mm**	**>10mm**	**>30mm**	**>5mm**	**>5mm**	**>5mm**
UUP2-U3080 ··· HUP2-U3080 ···	**>30mm**	**>0mm**	**>30mm**	**>10mm**	**>10mm**	**>10mm**

DC SLOT TYPE INDUCTIVE PROXIMITY SENSORS

3.5mm	3.5mm	5.0mm
○	○	○
-	-	-
PBT	PBT	PBT
○	●	○
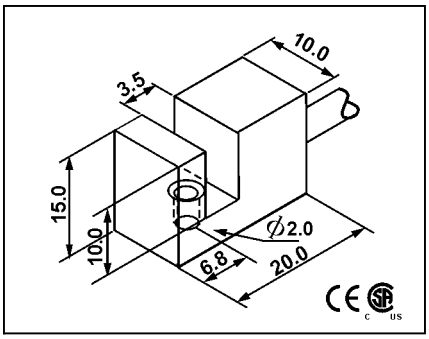	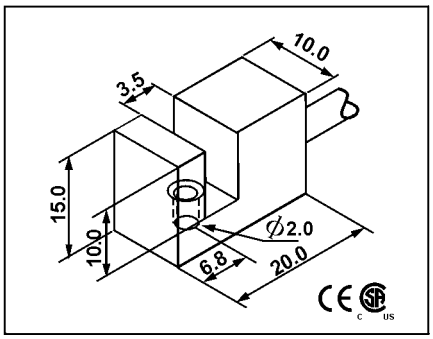	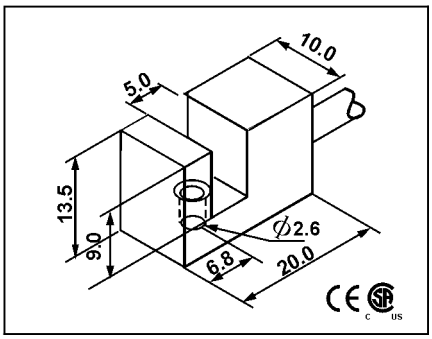
6~12VDC	10~30VDC	6~12VDC
≤5%	≤10%	≤5%
>2.2mA(OFF) / <1.1mA(ON)	≤10mA	>2.2mA(OFF) / <1.1mA(ON)
-	≤200mA	-
-	≤0.01mA	-
-	-	-
-	-	-
-	≤1.5V at 200 mA	-
2KHZ	2KHZ	2KHZ
Approx. 60% Insert depth	Approx. 60% Insert depth	Approx. 60% Insert depth
-	-	-
<0.01mm	<0.01mm	<0.01mm
IP67	IP67	IP67
−25℃ to 70℃	−25℃ to 70℃	−25℃ to 70℃
-	-	-
10mmx7mmx0.3mm	10mmx7mmx0.3mm	10mmx8mmx0.2mm
Yes	Yes	Yes
-	Yes	-
-	220~280mA	-
RFI>3V/m / EFT>1KV / ESD>4KV (contact)	RFI>3V/m / EFT>1KV / ESD>4KV (contact)	RFI>3V/m / EFT>1KV / ESD>4KV (contact)
IEC 60947-5-2,Part 7.4.1 / IEC 60947-5-2,Part 7.4.2	IEC 60947-5-2,Part 7.4.1 / IEC 60947-5-2,Part 7.4.2	IEC 60947-5-2,Part 7.4.1 / IEC 60947-5-2,Part 7.4.2
	UUP2-U3.510N-A3U2 / 1	
	UUP2-U3.510N-B3U2 / 2	
	UUP2-U3.510P-A3U2 / 3	
	UUP2-U3.510P-B3U2 / 4	
UUP2-U3.510NU / 21		UUP2-U0509NU / 21
Wiring diagram number see page 11-18. The following page is the same.		
4∅ 2x0.15	4∅ 3x0.15	4∅ 2x0.15
approx.38g	approx.38g	approx.40g

DC SLOT TYPE INDUCTIVE PROXIMITY SENSORS

5.0mm	5.0mm	5.0mm
○	○	○
-	-	-
PBT	PBT	PBT
●	○	●
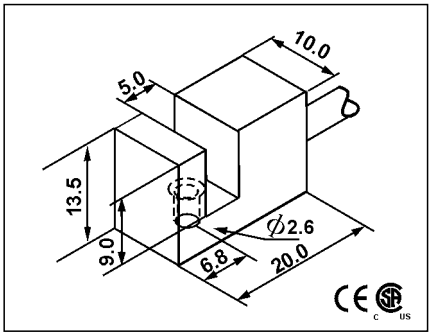	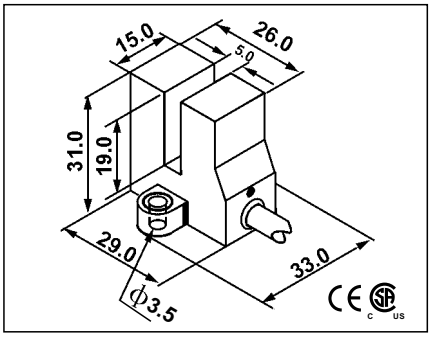	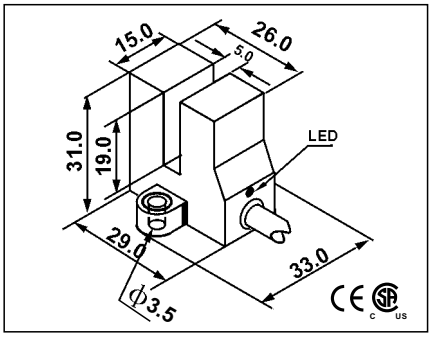
10~30VDC	6~12VDC	10~60VDC
≤10%	≤5%	≤10%
≤10mA	>2.2mA(OFF) / <1.1mA(ON)	≤1.8mA
≤200mA	-	≤100mA
<0.01mA	-	<0.8mA
-	-	-
-	-	-
≤1.5V at 200mA	-	≤6V at 100mA
2KHZ	2KHZ	2KHZ
Approx. 60% Insert depth	Approx. 60% Insert depth	Approx. 60% Insert depth
-	-	-
<0.01mm	<0.01mm	<0.01mm
IP67	IP67	IP67
−25°C to 70°C	−25°C to 70°C	−25°C to 70°C
-	-	-
10mmx8mmx0.2mm	15mmx12mmx0.3mm	15mmx12mmx0.3mm
Yes	Yes	Yes
Yes	-	Yes
220~280mA	-	120~150mA
RFI>3V/m / EFT>1KV / ESD>4KV (contact)	RFI>3V/m / EFT>1KV / ESD>4KV (contact)	RFI>3V/m / EFT>1KV / ESD>4KV (contact)
IEC 60947-5-2,Part 7.4.1 / IEC 60947-5-2,Part 7.4.2	IEC 60947-5-2,Part 7.4.1 / IEC 60947-5-2,Part 7.4.2	IEC 60947-5-2,Part 7.4.1 / IEC 60947-5-2,Part 7.4.2
UUP2-U0509N-A3U2 / 1		
UUP2-U0509N-B3U2 / 2		
UUP2-U0509P-A3U2 / 3		
UUP2-U0509P-B3U2 / 4		
		UUP2-U0519C-A2U2 / 7
		UUP2-U0519C-B2U2 / 8
	UUP2-U0519NU / 21	
4∅ 3x0.15	4.0∅ 2x0.34	4.0∅ 2x0.34
approx.40g	approx.59g	approx.59g

DC SLOT TYPE INDUCTIVE PROXIMITY SENSORS

5.0mm	10mm	10mm
○	○	○
-	-	-
PBT	PBT	PBT
●	○	●
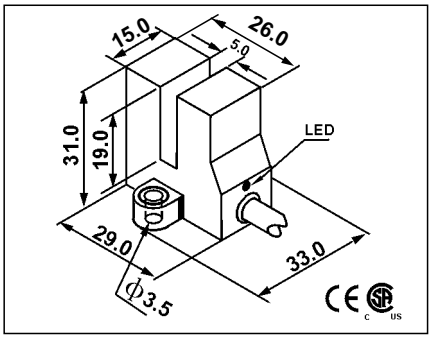	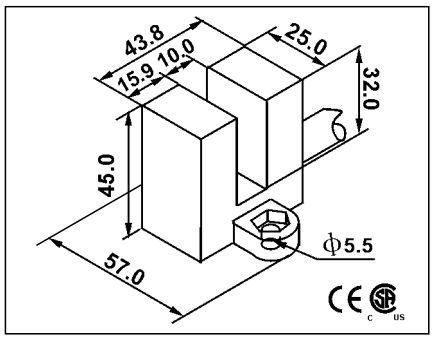	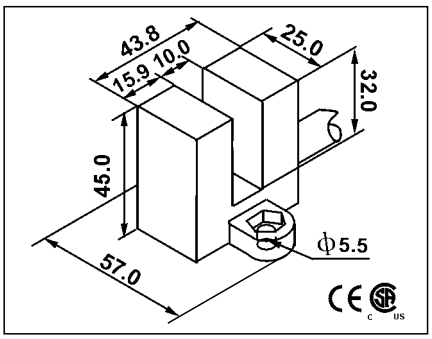
10~30VDC	6~12VDC	10~60VDC
≤10%	≤5%	≤10%
<10mA	>2.2mA(OFF) <1.1mA(ON)	<1.8mA
≤200mA	-	≤100mA
<0.01mA	-	≤1.8mA
-	-	-
-	-	-
<1.5V	-	≤6V at 100mA
2KHZ	1KHZ	1KHZ
Approx. 60% Insert depth	Approx. 60% Insert depth	Approx. 60% Insert depth
-	-	-
<0.01mm	<0.02mm	<0.02mm
IP67	IP67	IP67
–25°C to 70°C	-25°C to 70°C	-25°C to 70°C
-	-	-
15mmx12mmx0.3mm	22mmx22mmx0.5mm	22mmx22mmx0.5mm
Yes	Yes	Yes
Yes	-	Yes
220~280mA	-	120~150mA
RFI>3V/m / EFT>1KV / ESD>4KV (contact)	RFI>3V/m / EFT>1KV / ESD>4KV (contact)	RFI>3V/m / EFT>1KV / ESD>4KV (contact)
IEC 60947-5-2,Part 7.4.1 / IEC 60947-5-2,Part 7.4.2	IEC 60947-5-2,Part 7.4.1 / IEC 60947-5-2,Part 7.4.2	IEC 60947-5-2,Part 7.4.1 / IEC 60947-5-2,Part 7.4.2
UUP2-U0519N-A3U2 1		
UUP2-U0519N-B3U2 2		
UUP2-U0519P-A3U2 3		
UUP2-U0519P-B3U2 4		
		UUP2-U1032C-A3U2 7
		UUP2-U1032C-B3U2 8
	UUP2-U1032NU 21	
4.0∅ 3x0.34	5.8∅ 2x0.5	5.8∅ 3x0.5
approx.59g	approx.150g	approx.150g

DC SLOT TYPE INDUCTIVE PROXIMITY SENSORS

10mm	15mm	15mm
○	○	○
-	-	-
PBT	PBT	PBT
●	○	●
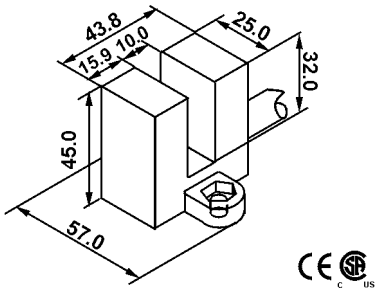	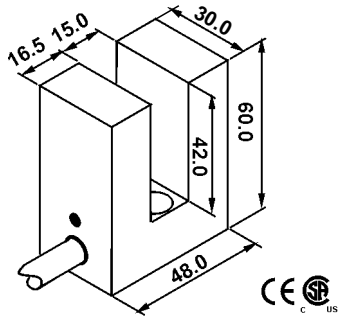	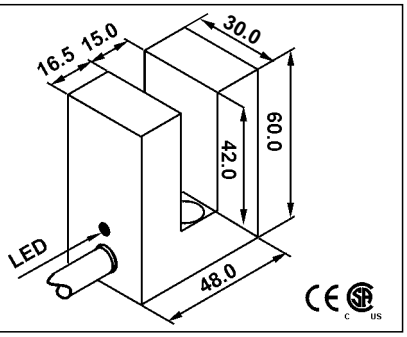
10~30VDC	6~12VDC	10~60VDC
≤10%	≤5%	≤10%
<10mA	>2.2mA(OFF) <1.1mA(ON)	≤1.8mA
≤200mA	-	≤100mA
<0.01mA	-	≤0.8mA
-	-	-
-	-	-
<1.5V	-	≤6V at 100mA
1KHZ	1KHZ	500HZ
Approx. 60% Insert depth	Approx. 60% Insert depth	Approx. 60% Insert depth
-	-	-
<0.02mm	<0.02mm	<0.02mm
IP67	IP67	IP67
−25°C to 70°C	−25°C to 70°C	−25°C to 70°C
-	-	-
22mmx22mmx0.5mm	30mmx30mmx1mm	30mmx30mmx1mm
Yes	Yes	Yes
Yes	-	Yes
220~280mA	-	120~150mA
RFI>3V/m / EFT>1KV / ESD>4KV (contact)	RFI>3V/m / EFT>1KV / ESD>4KV (contact)	RFI>3V/m / EFT>1KV / ESD>4KV (contact)
IEC 60947-5-2,Part 7.4.1 / IEC 60947-5-2,Part 7.4.2	IEC 60947-5-2,Part 7.4.1 / IEC 60947-5-2,Part 7.4.2	IEC 60947-5-2,Part 7.4.1 / IEC 60947-5-2,Part 7.4.2
UUP2-U1032N-A3U2 1		
UUP2-U1032N-B3U2 2		
UUP2-U1032P-A3U2 3		
UUP2-U1032P-B3U2 4		
UUP2-U1032P-S4U2 6		
UUP2-U1032N-S4U2 5		
		UUP2-U1542C-A2U2 7
		UUP2-U1542C-B2U2 8
	UUP2-U1542NU 21	
5.8∅	5.8∅ 2x0.5	5.8∅ 2x0.5
approx.150g	approx.181g	approx.181g

DC SLOT TYPE INDUCTIVE PROXIMITY SENSORS

15mm	30mm	30mm
○	○	○
-	-	-
PBT	PBT	PBT
●	○	●
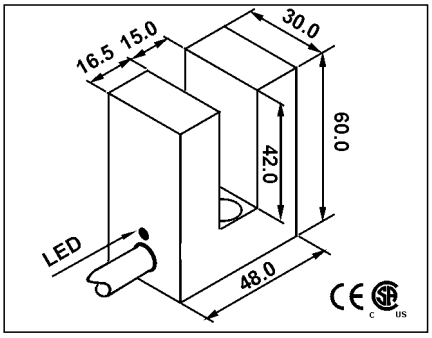	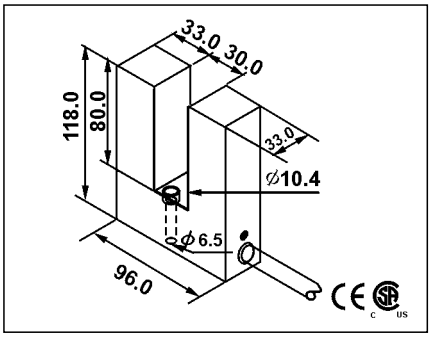	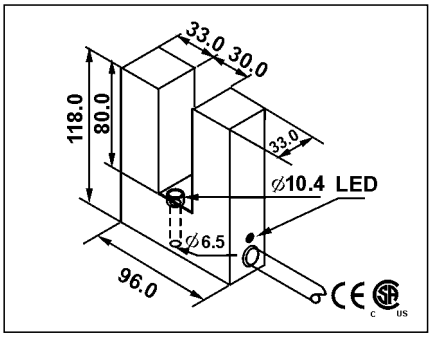
10~30VDC	6~12VDC	10~60VDC
≤10%	≤5%	≤10%
<10mA or <20mA	>2.2mA(OFF) / <1.1mA(ON)	≤1.8mA
≤200mA	-	≤100mA
<0.01mA	-	≤1.8mA
-	-	-
-	-	-
<1.5V	-	≤6V at 100mA
500HZ	150HZ	150HZ
Approx. 60% Insert depth	Approx. 60% Insert depth	Approx. 60% Insert depth
-	-	-
<0.02mm	<0.02mm	<0.02mm
IP67	IP67	IP67
−25°C to 70°C	−25°C to 70°C	−25°C to 70°C
-	-	-
30mmx30mmx1mm	45mmx45mmx1mm	45mmx45mmx1mm
Yes	Yes	Yes
Yes	-	Yes
220~280mA	-	120~150mA
RFI>3V/m / EFT>1KV / ESD>4KV (contact)	RFI>3V/m / EFT>1KV / ESD>4KV (contact)	RFI>3V/m / EFT>1KV / ESD>4KV (contact)
IEC 60947-5-2,Part 7.4.1 / IEC 60947-5-2,Part 7.4.2	IEC 60947-5-2,Part 7.4.1 / IEC 60947-5-2,Part 7.4.2	IEC 60947-5-2,Part 7.4.1 / IEC 60947-5-2,Part 7.4.2
UUP2-U1542N-A3U2 1		
UUP2-U1542N-B3U2 2		
UUP2-U1542P-A3U2 3		
UUP2-U1542P-B3U2 4		
UUP2-U1542P-S4U2 6		
UUP2-U1542N-S4U2 5		
		UUP2-U3080C-A2U2 7
		UUP2-U3080C-B2U2 8
	UUP2-U3080NU 21	
5.8∅	5.8∅ 2x0.5	5.8∅ 2x0.5
approx.181g	approx.280g	approx.280g

DC SLOT TYPE INDUCTIVE PROXIMITY SENSORS

30mm		
○		
-		
PBT		
●		

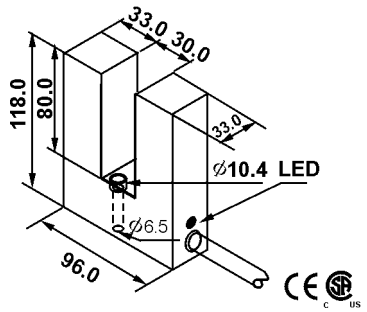

10~30VDC		
≤10%		
<10mA		
≤200mA		
<0.01mA		
-		
-		
<1.5V		
150HZ		
Approx. 60% Insert depth		
-		
<0.02mm		
IP67		
−25°C to 70°C		
-		
45mmx45mmx1mm		
Yes		
Yes		
220~280mA		
RFI>3V/m / EFT>1KV / ESD>4KV (contact)		
IEC 60947-5-2,Part 7.4.1 / IEC 60947-5-2,Part 7.4.2		

UUP2-U3080N-A3U2	1				
UUP2-U3080N-B3U2	2				
UUP2-U3080P-A3U2	3				
UUP2-U3080P-B3U2	4				
UUP2-U3080P-S4U2	6				
UUP2-U3080N-S4U2	5				

5.8∅		
approx.280g		

DC SLOT TYPE INDUCTIVE PROXIMITY SENSORS WITH CONNECTOR

5.0mm	5.0mm	10mm
○	○	○
-	-	-
PBT	PBT	PBT
●	●	●
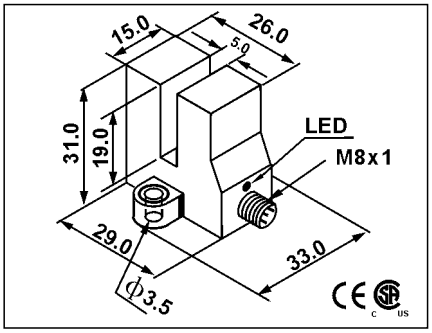	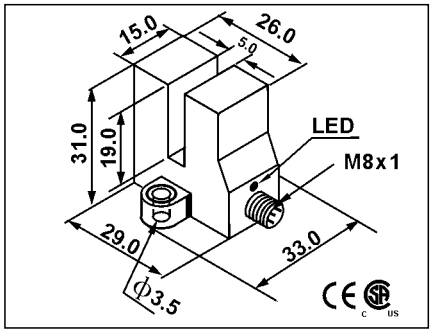	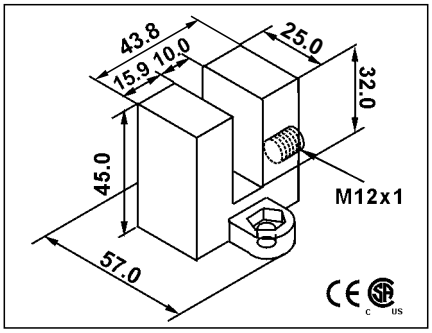
10~60VDC	10~30VDC	10~60VDC
≤10%	≤10%	≤10%
<1.8mA	<10mA	<1.8mA
≤100mA	≤200mA	≤100mA
≤1.8mA	<0.01mA	≤1.8mA
-	-	-
-	-	-
≤6V at 100mA	<1.5V	≤6V at 100mA
2KHZ	2KHZ	1KHZ
Approx. 60% Insert depth	Approx. 60% Insert depth	Approx. 60% Insert depth
-	-	-
<0.01mm	<0.01mm	<0.02mm
IP67	IP67	IP67
−25°C to 70°C	−25°C to 70°C	−25°C to 70°C
-	-	-
15mmx12mmx0.3mm	15mmx12mmx0.3mm	22mmx22mmx0.5mm
Yes	Yes	Yes
Yes	Yes	Yes
120~150mA	220~280mA	120~150mA
RFI>3V/m / EFT>1KV / ESD>4KV (contact)	RFI>3V/m / EFT>1KV / ESD>4KV (contact)	RFI>3V/m / EFT>1KV / ESD>4KV (contact)
IEC 60947-5-2,Part 7.4.1 / IEC 60947-5-2,Part 7.4.2	IEC 60947-5-2,Part 7.4.1 / IEC 60947-5-2,Part 7.4.2	IEC 60947-5-2,Part 7.4.1 / IEC 60947-5-2,Part 7.4.2

		UUP2-U0519N-ACU3	25		
		UUP2-U0519N-BCU3	25		
		UUP2-U0519P-ACU3	26		
		UUP2-U0519P-BCU3	26		
UUP2-U0519C-ACU3	35			UUP2-U1032C-ARU4	34
UUP2-U0519C-BCU3	73			UUP2-U1032C-BRU4	74

approx.59g	approx.59g	approx.59g

DC SLOT TYPE INDUCTIVE PROXIMITY SENSORS WITH CONNECTOR

10mm	15mm	15mm
○	○	○
-	-	-
PBT	PBT	PBT
●	●	●
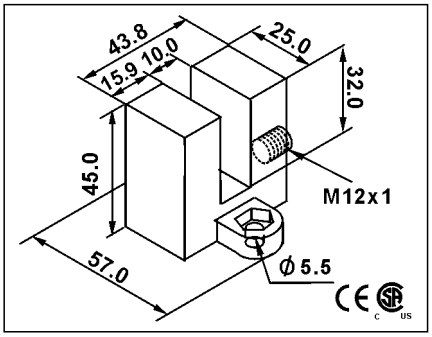	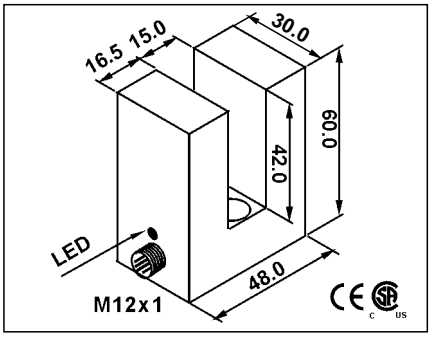	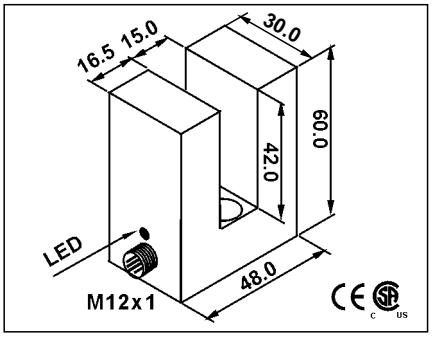
10~30VDC	10~60VDC	10~30VDC
≤10%	≤10%	≤10%
<10mA	≤1.8mA	<10mA
≤200mA	≤100mA	≤200mA
<0.01mA	≤0.8mA	<0.01mA
-	-	-
-	-	-
< 1.5V	≤6V at 100mA	< 1.5V
500HZ	150HZ	500HZ
Approx. 60% Insert depth	Approx. 60% Insert depth	Approx. 60% Insert depth
-	-	-
<0.02mm	<0.02mm	<0.02mm
IP67	IP67	IP67
−25°C to 70°C	−25°C to 70°C	−25°C to 70°C
-	-	-
22mmx22mmx1mm	30mmx30mmx1mm	30mmx30mmx1mm
Yes	Yes	Yes
Yes	Yes	Yes
220~280mA	120~150mA	220~280mA
RFI>3V/m / EFT>1KV / ESD>4KV (contact)	RFI>3V/m / EFT>1KV / ESD>4KV (contact)	RFI>3V/m / EFT>1KV / ESD>4KV (contact)
IEC 60947-5-2,Part 7.4.1 / IEC 60947-5-2,Part 7.4.2	IEC 60947-5-2,Part 7.4.1 / IEC 60947-5-2,Part 7.4.2	IEC 60947-5-2,Part 7.4.1 / IEC 60947-5-2,Part 7.4.2
UUP2-U1032N-ARU4 29		UUP2-U1542N-ARU4 29
UUP2-U1032N-BRU4 30		UUP2-U1542N-BRU4 30
UUP2-U1032P-ARU4 31		UUP2-U1542P-ARU4 31
UUP2-U1032P-BRU4 32		UUP2-U1542P-BRU4 32
UUP2-U1032P-SRU4 34		UUP2-U1542P-SRU4 34
UUP2-U1032N-SRU4 33		UUP2-U1542N-SRU4 33
	UUP2-U1542C-ARU4 36	
	UUP2-U1542C-BRU4 74	
approx.68g	approx.100g	approx.100g

DC SLOT TYPE INDUCTIVE PROXIMITY SENSORS WITH CONNECTOR

30mm	30mm	30mm
○	○	○
-	-	-
PBT	PBT	PBT
●	●	●
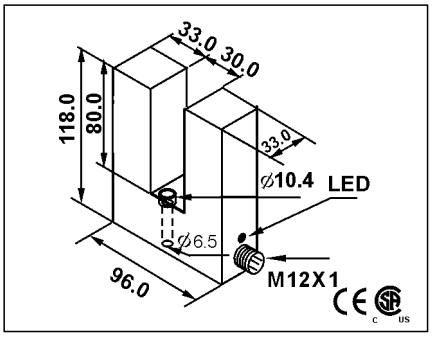	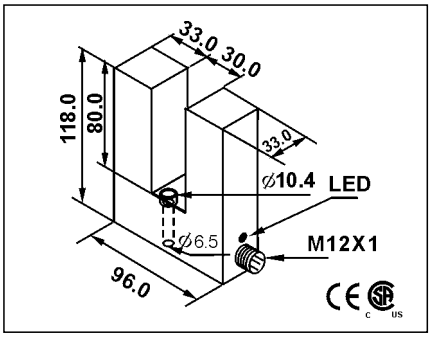	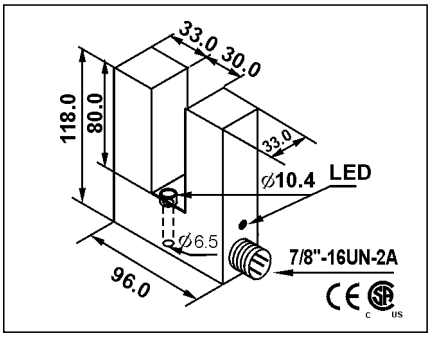
10~60VDC	10~30VDC	10~30VDC
≤10%	≤10%	≤10%
≤1.8mA	<10mA	<10mA
≤100mA	≤200mA	≤200mA
≤1.8mA	<0.01mA	<0.01mA
-	-	-
-	-	-
≤6V at 100mA	<1.5V	<1.5V
150HZ	150HZ	150HZ
Approx. 60% Insert depth	Approx. 60% Insert depth	Approx. 60% Insert depth
-	-	-
<0.02mm	<0.02mm	<0.02mm
IP67	IP67	IP67
−25°C to 70°C	−25°C to 70°C	−25°C to 70°C
-	-	-
45mmx45mmx1mm	45mmx45mmx1mm	45mmx45mmx1mm
Yes	Yes	Yes
Yes	Yes	Yes
120~150mA	220~280mA	220~280mA
RFI>3V/m / EFT>1KV / ESD>4KV (contact)	RFI>3V/m / EFT>1KV / ESD>4KV (contact)	RFI>3V/m / EFT>1KV / ESD>4KV (contact)
IEC 60947-5-2,Part 7.4.1 / IEC 60947-5-2,Part 7.4.2	IEC 60947-5-2,Part 7.4.1 / IEC 60947-5-2,Part 7.4.2	IEC 60947-5-2,Part 7.4.1 / IEC 60947-5-2,Part 7.4.2

		UUP2-U3080N-ARU4	29	UUP2-U3080N-AZU4	37
		UUP2-U3080N-BRU4	30	UUP2-U3080N-BZU4	38
		UUP2-U3080P-ARU4	31	UUP2-U3080P-AZU4	39
		UUP2-U3080P-BRU4	32	UUP2-U3080P-BZU4	40
		UUP2-U3080P-SRU4	34	UUP2-U3080P-SZU4	42
		UUP2-U3080N-SRU4	33	UUP2-U3080N-SZU4	41
UUP2-U3080C-ARU4	36				
UUP2-U3080C-BRU4	74				

approx.280g	approx.280g	approx.280g

AC/DC SLOT TYPE INDUCTIVE PROXIMITY SENSORS

5.0mm	10mm	15mm
○	○	○
-	-	-
PBT	PBT	PBT
●	●	●
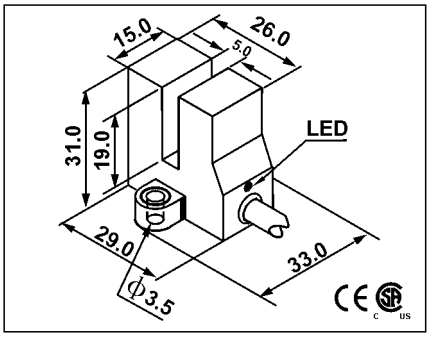	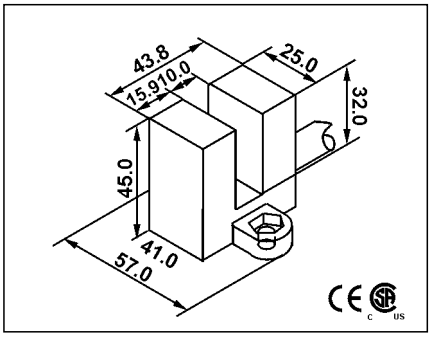	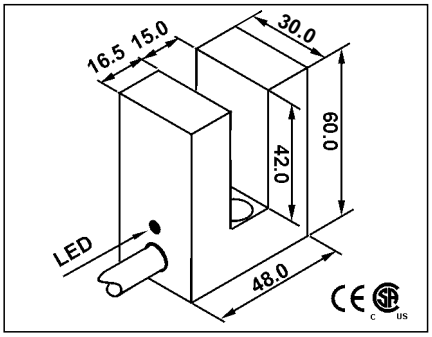
20~250VAC,50-60Hz;20~250VDC	20~250VAC,50-60Hz;20~250VDC	20~250VAC,50-60Hz;20~250VDC
-	-	-
<1.8mA	<1.8mA	<1.8mA
≤400mA	≤400mA	≤400mA
<1.8mA	<1.8mA	<1.8mA
5A at 20ms	5A at 20ms	5A at 20ms
≥5mA	≥5mA	≥5mA
<10V AC : <8V DC	<10V AC : <8V DC	<10V AC : <8V DC
25HZ AC ; 40Hz DC	25HZ AC ; 40Hz DC	25HZ AC ; 40Hz DC
Approx. 60% Insert depth	Approx. 60% Insert depth	Approx. 60% Insert depth
<15%(Sr)	<15%(Sr)	<15%(Sr)
<1.0%(Sr)	<2.0%(Sr)	<2.0%(Sr)
IP67	IP67	IP67
−25°C to 70°C	−25°C to 70°C	−25°C to 70°C
<±%10(Sr)	<±%10(Sr)	<±%10(Sr)
15mmx12mmx0.3mm	22mmx22mmx0.5mm	30mmx30mmx1mm
-	-	-
-	-	-
-	-	-
RFI>3V/m / EFT>1KV / ESD>4KV (contact)	RFI>3V/m / EFT>1KV / ESD>4KV (contact)	RFI>3V/m / EFT>1KV / ESD>4KV (contact)
IEC 60947-5-2,Part 7.4.1 / IEC 60947-5-2,Part 7.4.2	IEC 60947-5-2,Part 7.4.1 / IEC 60947-5-2,Part 7.4.2	IEC 60947-5-2,Part 7.4.1 / IEC 60947-5-2,Part 7.4.2
UUP2-U0519A-A2L2 9	UUP2-U1032A-A2L2 9	UUP2-U1542A-A2L2 9
UUP2-U0519A-B2L2 10	UUP2-U1032A-B2L2 10	UUP2-U1542A-B2L2 10
UUP2-U0519C-A2L2 9	UUP2-U1032C-A2L2 9	UUP2-U1542C-A2L2 9
UUP2-U0519C-B2L2 10	UUP2-U1032C-B2L2 10	UUP2-U1542C-B2L2 10
Wiring diagram number see page 11-18. The following page is the same.		
4.0⌀ 3x0.34	5.8⌀ 2x0.5	5.8⌀ 2x0.5
approx.59g	approx.150g	approx.180g

AC/DC SLOT TYPE INDUCTIVE PROXIMITY SENSORS

30mm
○
-
PBT
●

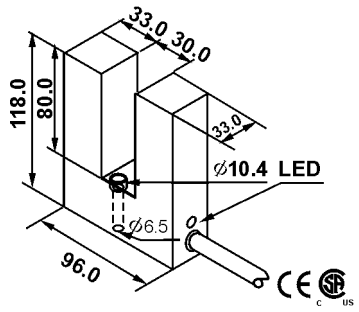

20~250VAC,50-60Hz;20~250VDC
-
≤1.8mA
≤400mA
<1.8mA
5A at 20ms
≥5mA
<10V AC : <8V DC
25HZ AC ; 40Hz DC
Approx. 60% Insert depth
<15%(Sr)
<2.0%(Sr)
IP67
−25°C to 70°C
<±%10(Sr)
45mmx45mmx1mm
-
-
-
RFI>3V/m / EFT>1KV / ESD>4KV (contact)
IEC 60947-5-2,Part 7.4.1 / IEC 60947-5-2,Part 7.4.2

UUP2-U3080A-A2L2	9
UUP2-U3080A-B2L2	10
UUP2-U3080C-A2L2	9
UUP2-U3080C-B2L2	10

5.8∅2X0.5
approx.280g

AC/DC SLOT TYPE INDUCTIVE PROXIMITY SENSORS WITH CONNECTOR

10mm	15mm	30mm
○	○	○
-	-	-
PBT	PBT	PBT
●	●	●
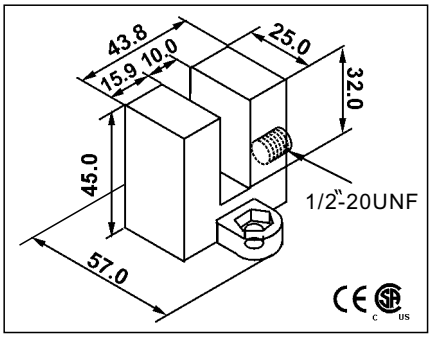	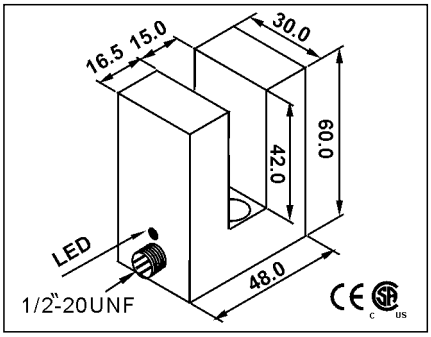	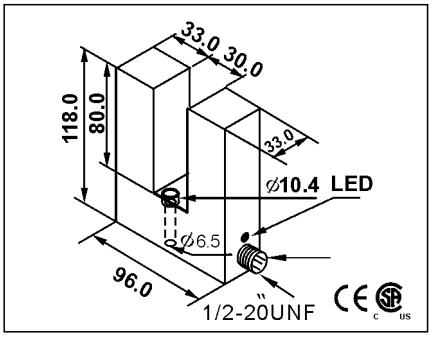
20~250VAC,50-60Hz;20~250VDC	20~250VAC,50-60Hz;20~250VDC	20~250VAC,50-60Hz;20~250VDC
-	-	-
<1.8mA	<1.8mA	<1.8mA
≤400mA	≤400mA	≤400mA
<1.8mA	<1.8mA	<1.8mA
5A at 20ms	5A at 20ms	5A at 20ms
≥5mA	≥5mA	≥5mA
<10V AC : <8V DC	<10V AC : <8V DC	<10V AC : <8V DC
25HZ AC ; 40Hz DC	25HZ AC ; 40Hz DC	25HZ AC ; 40Hz DC
Approx. 60% Insert depth	Approx. 60% Insert depth	Approx. 60% Insert depth
<15%(Sr)	<15%(Sr)	<15%(Sr)
<2.0%(Sr)	<2.0%(Sr)	<2.0%(Sr)
IP67	IP67	IP67
−25°C to 70°C	−25°C to 70°C	−25°C to 70°C
<±%10(Sr)	<±%10(Sr)	<±%10(Sr)
22mmx22mmx0.5mm	30mmx30mmx1mm	45mmx45mmx1mm
-	-	-
-	-	-
-	-	-
RFI>3V/m / EFT>1KV / ESD>4KV (contact)	RFI>3V/m / EFT>1KV / ESD>4KV (contact)	RFI>3V/m / EFT>1KV / ESD>4KV (contact)
IEC 60947-5-2,Part 7.4.1 / IEC 60947-5-2,Part 7.4.2	IEC 60947-5-2,Part 7.4.1 / IEC 60947-5-2,Part 7.4.2	IEC 60947-5-2,Part 7.4.1 / IEC 60947-5-2,Part 7.4.2
UUP2-U1032A-AUL3 54	UUP2-U1542A-AUL3 54	UUP2-U3080A-AUL3 54
UUP2-U1032A-BUL3 54	UUP2-U1542A-BUL3 54	UUP2-U3080A-BUL3 54
UUP2-U1032C-AUL3 54	UUP2-U1542C-AUL3 54	UUP2-U3080C-AUL3 54
UUP2-U1032C-BUL3 54	UUP2-U1542C-BUL3 54	UUP2-U3080C-BUL3 54
approx.68g	approx.100g	approx.200g

AC/DC SLOT TYPE INDUCTIVE PROXIMITY SENSORS WITH CONNECTOR

30mm
○
-
PBT
●

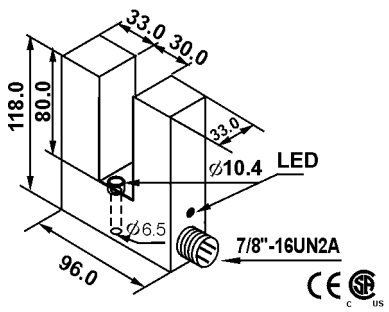

20~250VAC,50-60Hz;20~250VDC
-
<1.8mA
≤400mA
<1.8mA
5A at 20ms
≥5mA
<10V AC : <8V DC
25HZ AC ; 40Hz DC
Approx. 60% Insert depth
<15%(Sr)
<2.0%(Sr)
IP67
−25°C to 70°C
<±%10(Sr)
45mmx45mmx1mm
-
-
-
RFI>3V/m / EFT>1KV / ESD>4KV (contact)
IEC 60947-5-2,Part 7.4.1 / IEC 60947-5-2,Part 7.4.2

UUP2-U3080A-AZL3	62
UUP2-U3080A-BZL3	62
UUP2-U3080C-AZL3	62
UUP2-U3080C-BZL3	62

approx.200g