PART M-01 ~ M-23

Diameter
● Shielded ○ non-Shielded
Switching Distance Sn mm
Housing Material
● With LED ○ Without LED

Dimensions (unit: mm)

Operating Voltage
Ripple
No Load Current
Max. Load Current
Leakge Current
Surge Current
Min. Load Current
Voltage Drop
Switching Frequency
Response Time
Switching Hysteresis
Repeat Accuracy
Protection Category
Operating Temperature
Temperature Drift
Short Circuit Protection
Overload Trip Point
Time Delay Before Availability
EMC
Shock / Vibration
Material Active Face

DC 3 wire 10-30V NPN N.O.
DC 3 wire 10-30V NPN N.C.
DC 3 wire 10-30V PNP N.O.
DC 3 wire 10-30V PNP N.C.
DC 4 wire 10-30V Changeover PNP (N.O. & N.C.)
DC 4 wire 10-30V Changeover NPN (N.O. & N.C.)
DC 2 wire 10-60V N.O.
DC 2 wire 10-60V N.C.
DC 3 wire 5-36v NPN N.O.
DC 3 wire 5-36v NPN N.C.
DC 3 wire 5-36v PNP N.O.
DC 3 wire 5-36v PNP N.C.
AC 2 wire 20-250V N.O.
AC 2 wire 20-250V N.C.
AC 2 wire 20-250V N.O. or N.C. Changeable
AC/DC 2 wire 20-250V N.O.
AC/DC 2 wire 20-250V N.C.
AC/DC 2 wire 20-250V N.O. or N.C. Changeable

Remark

Cable 2M (PVC)
Weight

Please put each catalog page in the blank. The specification on the left will help your reading.

MPS SERIES MICRO-PROXIMITY SENSOR DC 2-WIRE TYPE

MPS-6	MPS-6	MPS-8
○	○	○
1.2mm	1.2mm	1.8mm
Polycarbonate	Polycarbonate	Polycarbonate
●	●	●
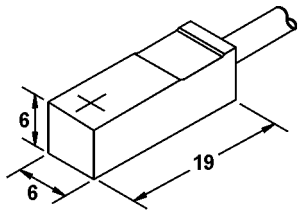	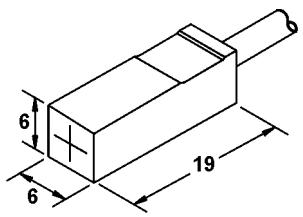	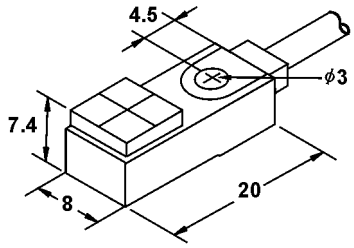
10-30V DC±10%	10-30V DC±10%	10-30V DC±10%
<10%	<10%	<10%
<0.8mA	<0.8mA	<0.8mA
100mA	100mA	100mA
<0.8mA	<0.8mA	<0.8mA
-	-	-
3mA	3mA	3mA
<6V	<6V	<6V
1KHZ	1KHZ	1KHZ
0.2ms/0.2ms	0.2ms/0.2ms	0.2ms/0.2ms
<15%(Sr)	<15%(Sr)	<15%(Sr)
<0.04mm	<0.04mm	<0.04mm
IP67	IP67	IP67
-25°C - +70°C	-25°C - +70°C	-25°C - +70°C
<10%(Sr)	<10%(Sr)	<10%(Sr)
YES	YES	YES
120mA	120mA	120mA
<10ms	<10ms	<10ms
RFI>3V/m / EFT>1KV / ESD>4KV (contact)	RFI>3V/m / EFT>1KV / ESD>4KV (contact)	RFI>3V/m / EFT>1KV / ESD>4KV (contact)
IEC 60947-5-2,Part 7.4.1 / IEC 60947-5-2,Part 7.4.2	IEC 60947-5-2,Part 7.4.1 / IEC 60947-5-2,Part 7.4.2	IEC 60947-5-2,Part 7.4.1 / IEC 60947-5-2,Part 7.4.2
Polycarbonate	Polycarbonate	Polycarbonate
MQP2-661.2C-A2U2F A	MQP2-661.2C-A2U2T A	MQP2-881.8C-A2U2F A
MQP2-661.2C-B2U2F A	MQP2-661.2C-B2U2T A	MQP2-881.8C-B2U2F A
MPS Series Wiring diagram number see page L-10 The following page is same.		
2.7φ2x0.15	2.7φ2x0.15	2.7φ2x0.15
approx.10 g	approx.10 g	approx.12 g

MPS SERIES MICRO-PROXIMITY SENSOR DC 2-WIRE TYPE

MPS-8	MPS-12	MPS-12
○	○	○
1.5mm	2mm	2mm
Polycarbonate	Polycarbonate	Polycarbonate
●	●	●
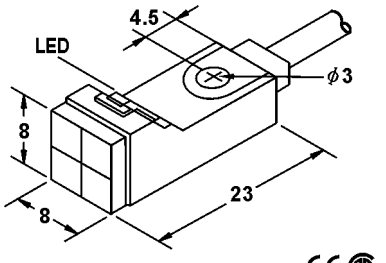	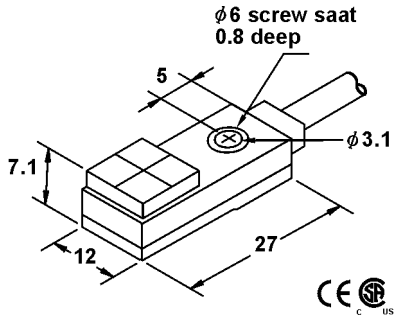	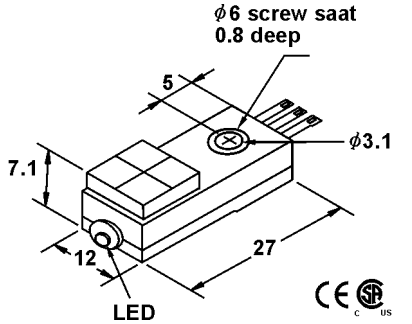
10-30V DC ± 10%	10-30V DC ± 10%	10-30V DC ± 10%
<10%	<10%	<10%
<0.8mA	<0.8mA	<0.8mA
100mA	100mA	100mA
<0.8mA	<0.8mA	<0.8mA
-	-	-
3mA	3mA	3mA
<6V	<6V	<6V
1KHZ	1KHZ	1KHZ
0.2ms/0.2ms	0.2ms/0.2ms	0.2ms/0.2ms
<15%(Sr)	<15%(Sr)	<15%(Sr)
<0.04mm	<0.04mm	<0.04mm
IP67	IP67	IP67
-25°C - +70°C	-25°C - +70°C	-25°C - +70°C
<10%(Sr)	<10%(Sr)	<10%(Sr)
YES	YES	YES
120mA	120mA	120mA
<10ms	<10ms	<10ms
RFI>3V/m / EFT>1KV / ESD>4KV (contact)	RFI>3V/m / EFT>1KV / ESD>4KV (contact)	RFI>3V/m / EFT>1KV / ESD>4KV (contact)
IEC 60947-5-2,Part 7.4.1 / IEC 60947-5-2,Part 7.4.2	IEC 60947-5-2,Part 7.4.1 / IEC 60947-5-2,Part 7.4.2	IEC 60947-5-2,Part 7.4.1 / IEC 60947-5-2,Part 7.4.2
Polycarbonate	Polycarbonate	Polycarbonate
MQP2-881.5C-A2U2T A	MQP2-1202C-A2U2F A	MQP2-1202C-ANU3F B
MQP2-881.5C-B2U2T A	MQP2-1202C-B2U2F A	MQP2-1202C-BNU3F B
MPS Series Wiring diagram number see Page L-10 The following page is same.		MCP1-1202C-ANU3F 3 PIN connector type see page xxx.
2.7φ2x0.15	3φ2x0.15	
approx.12 g	approx.20 g	approx.5 g

MPS SERIES MICRO-PROXIMITY SENSOR DC 2-WIRE TYPE

MPS-15	MPS-15	MPS-15
○	○	○
4mm	4mm	6.4mm
Polycarbonate	Polycarbonate	Polycarbonate
●	●	●
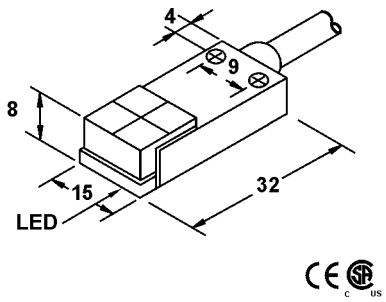	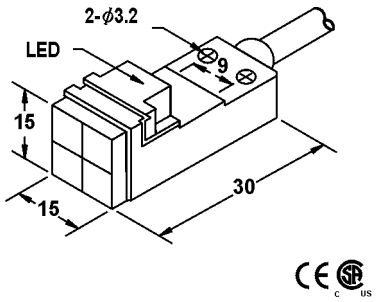	*: Long sensing range. 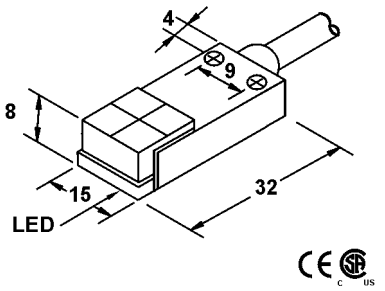
10-30V DC ± 10%	10-30V DC ± 10%	10-30V DC ± 10%
<10%	<10%	<10%
<0.8mA	<0.8mA	<0.8mA
100mA	100mA	100mA
<0.8mA	<0.8mA	<0.8mA
-	-	-
3mA	3mA	3mA
<6V	<6V	<6V
1KHZ	1KHZ	1KHZ
0.2ms/0.2ms	0.2ms/0.2ms	0.2ms/0.2ms
<15%(Sr)	<15%(Sr)	<15%(Sr)
<0.04mm	<0.04mm	<0.04mm
IP67	IP67	IP67
-25°C - +70°C	-25°C - +70°C	-25°C - +70°C
<10%(Sr)	<10%(Sr)	<10%(Sr)
YES	YES	YES
120mA	120mA	120mA
<10ms	<10ms	<10ms
RFI>3V/m / EFT>1KV / ESD>4KV (contact)	RFI>3V/m / EFT>1KV / ESD>4KV (contact)	RFI>3V/m / EFT>1KV / ESD>4KV (contact)
IEC 60947-5-2,Part 7.4.1 / IEC 60947-5-2,Part 7.4.2	IEC 60947-5-2,Part 7.4.1 / IEC 60947-5-2,Part 7.4.2	IEC 60947-5-2,Part 7.4.1 / IEC 60947-5-2,Part 7.4.2
Polycarbonate	Polycarbonate	Polycarbonate
MQP2-1504C-A2U2F A	MQP2-1504C-A2U2T A	MQP2-156.4C-A2U2F A
MQP2-1504C-B2U2F A	MQP2-1504C-B2U2T A	MQP2-156.4C-B2U2F A
MPS Series Wiring diagram number see page L-10 The following page is same.		
3φ2x0.15	3φ2x0.15	3φ2x0.15
approx.20 g	approx.20 g	approx.20 g

MPS SERIES MICRO-PROXIMITY SENSOR DC 2-WIRE TYPE

MPS-15	MPS-10	
○	○	
6.4mm	2.0mm	
Polycarbonate	Polycarbonate	
●	●	
*: Long sensing range. 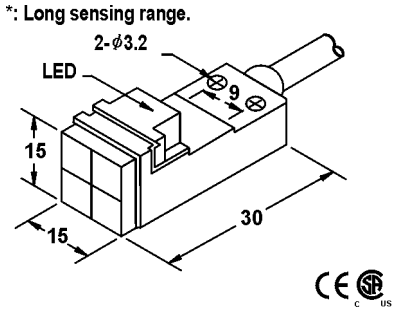 	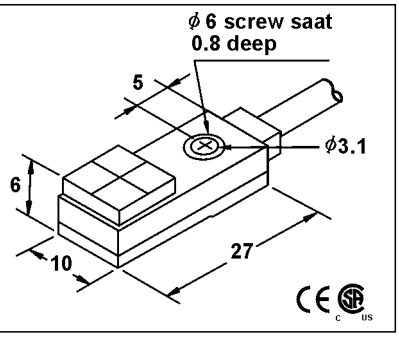 	
10-30V DC ± 10%	10-30V DC ± 10%	
<10%	<10%	
<10mA	<10mA	
100mA	100mA	
<0.01mA	<0.01mA	
-	-	
-	-	
<6V	<6V	
1KHZ	1KHZ	
0.2ms/0.2ms	0.2ms/0.2ms	
<15%(Sr)	<15%(Sr)	
<0.04mm	<0.04mm	
IP67	IP67	
-25 ° C - +70 ° C	-25 ° C - +70 ° C	
<10%(Sr)	<10%(Sr)	
YES	YES	
120mA	120mA	
<10ms	<10ms	
RFI>3V/m / EFT>1KV / ESD>4KV (contact)	RFI>3V/m / EFT>1KV / ESD>4KV (contact)	
IEC 60947-5-2,Part 7.4.1 / IEC 60947-5-2,Part 7.4.2	IEC 60947-5-2,Part 7.4.1 / IEC 60947-5-2,Part 7.4.2	
Polycarbonate	Polycarbonate	
MQP2-156.4C-A2U2T A	MQP2-1002C-A2U2F A	
MQP2-156.4C-B2U2T A	MQP2-1002C-B2U2F A	
MPS Series Wiring diagram number see page L-10 The following page is same.		
3ϕ2x0.15	3ϕ2x0.15	
approx.20 g	approx.18 g	

MPS SERIES MICRO-PROXIMITY SENSOR DC 3-WIRE NPN/PNP TYPE

MPS-6	MPS-6	MPS-8
○	○	○
1.2mm	1.2mm	1.5mm
Polycarbonate	Polycarbonate	Polycarbonate
●	●	●
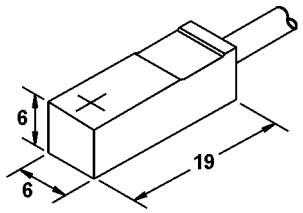	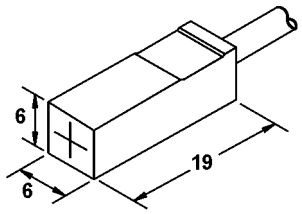	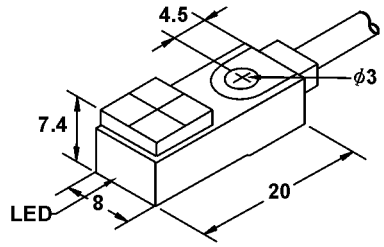
10-30VDC	10-30VDC	10-30VDC
<10%	<10%	<10%
<10mA	<10mA	<10mA
100mA	100mA	100mA
<0.01mA	<0.01mA	<0.01mA
-	-	-
-	-	-
<1.5V	<1.5V	<1.5V
400HZ	400HZ	500HZ
0.5ms/0.5ms	0.5ms/0.5ms	0.5ms/0.5ms
<15%(Sr)	<15%(Sr)	<15%(Sr)
<0.04mm	<0.04mm	<0.04mm
IP67	IP67	IP67
-25°C - +70°C	-25°C - +70°C	-25°C - +70°C
<10%(Sr)	<10%(Sr)	<10%(Sr)
YES	YES	YES
220mA	220mA	220mA
<10ms	<10ms	<10ms
RFI>3V/m / EFT>1KV / ESD>4KV (contact)	RFI>3V/m / EFT>1KV / ESD>4KV (contact)	RFI>3V/m / EFT>1KV / ESD>4KV (contact)
IEC 60947-5-2,Part 7.4.1 / IEC 60947-5-2,Part 7.4.2	IEC 60947-5-2,Part 7.4.1 / IEC 60947-5-2,Part 7.4.2	IEC 60947-5-2,Part 7.4.1 / IEC 60947-5-2,Part 7.4.2
Polycarbonate	Polycarbonate	Polycarbonate

MQP2-661.2N-A3U2F	C	MQP2-661.2N-A3U2T	C	MQP2-881.5N-A3U2F	C
MQP2-661.2N-B3U2F	C	MQP2-661.2N-B3U2T	C	MQP2-881.5N-B3U2F	C
MQP2-661.2P-A3U2F	D	MQP2-661.2P-A3U2T	D	MQP2-881.5P-A3U2F	D
MQP2-661.2P-B3U2F	D	MQP2-661.2P-B3U2T	D	MQP2-881.5P-B3U2F	D

MPS Series Wiring diagram number see page L-10 The following page is same.

2.7φ3x0.15	2.7φ3x0.15	2.7φ3x0.15
approx.10 g	approx.10 g	approx.12 g

MPS SERIES MICRO-PROXIMITY SENSOR DC 3-WIRE NPN/PNP TYPE

MPS-8	MPS-12	MPS-12
○	○	○
1.5mm	2mm	2mm
Polycarbonate	Polycarbonate	Polycarbonate
●	●	●
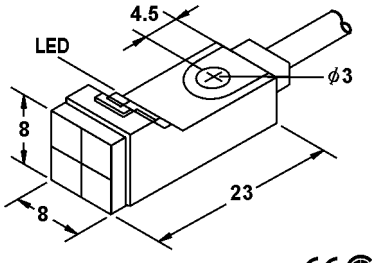	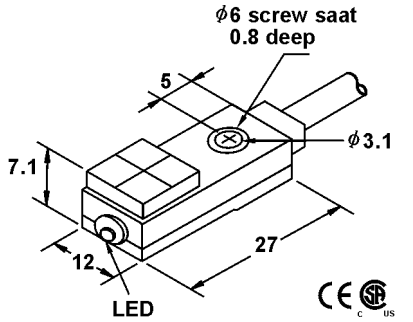	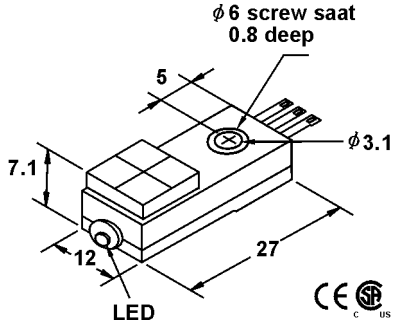
10-30VDC	10-30VDC / 5-36VDC	10-30VDC / 5-36VDC
<10%	<10%	<10%
<10mA	<10mA	<10mA
100mA	100mA / 200mA	100mA / 200mA
<0.01mA	<0.01mA	<0.01mA
-	-	-
-	-	-
<1.5V	<1.5V(10-30V) or <1.0V(5-36v)	<1.5V(10-30V) or <1.0V(5-36v)
500HZ	500HZ	500HZ
0.5ms/0.5ms	0.5ms/0.5ms	0.5ms/0.5ms
<15%(Sr)	<15%(Sr)	<15%(Sr)
<0.04mm	<0.04mm	<0.04mm
IP67	IP67	IP67
-25 ° C - +70 ° C	-25 ° C - +70 ° C	-25 ° C - +70 ° C
<10%(Sr)	<10%(Sr)	<10%(Sr)
YES	YES	YES
220mA	120mA / 220mA	120mA / 220mA
<10ms	<10ms	<10ms
RFI>3V/m / EFT>1KV / ESD>4KV (contact)	RFI>3V/m / EFT>1KV / ESD>4KV (contact)	RFI>3V/m / EFT>1KV / ESD>4KV (contact)
IEC 60947-5-2,Part 7.4.1 / IEC 60947-5-2,Part 7.4.2	IEC 60947-5-2,Part 7.4.1 / IEC 60947-5-2,Part 7.4.2	IEC 60947-5-2,Part 7.4.1 / IEC 60947-5-2,Part 7.4.2
Polycarbonate	Polycarbonate	Polycarbonate
MQP2-881.5N-A3U2T C	MQP2-1202N-A3U2F C	MQP2-1202N-ANU3F E
MQP2-881.5N-B3U2T C	MQP2-1202N-B3U2F C	MQP2-1202N-BNU3F E
MQP2-881.5P-A3U2T D	MQP2-1202P-A3U2F D	MQP2-1202P-ANU3F F
MQP2-881.5P-B3U2T D	MQP2-1202P-B3U2F D	MQP2-1202P-BNU3F F
	C IQP2-1202N-A3U2F	E IQP2-1202N-ANU3F
	C IQP2-1202N-B3U2F	E IQP2-1202N-BNU3F
	D IQP2-1202P-A3U2F	F IQP2-1202P-ANU3F
	D IQP2-1202P-B3U2F	F IQP2-1202P-BNU3F
MPS Series Wiring diagram number see page L-10 The following page is same.		MCP2-1202N-ANU3F 3 PIN connector type see page L-10
2.7φ3x0.15	3φ3x0.15	
approx.12 g	approx.20 g	approx.5 g

MPS SERIES MICRO-PROXIMITY SENSOR DC 3-WIRE NPN/PNP TYPE

MPS-15	MPS-15	MPS-15
○	○	○
4mm	4mm	6.4mm
Polycaribonate	Polycaribonate	Polycaribonate
●	●	●
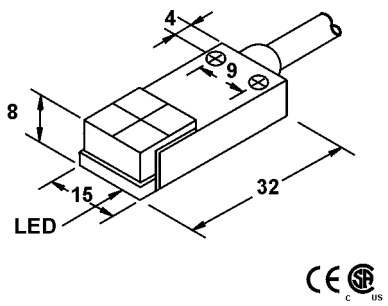	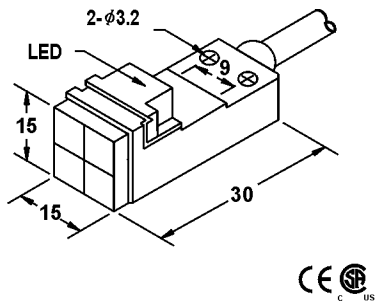	*: Long sensing range. 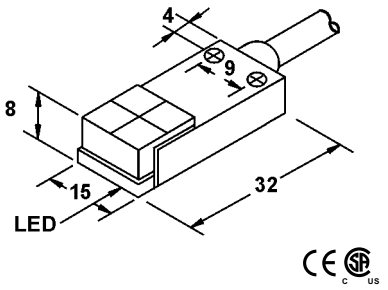
10-30VDC / 5-36VDC	10-30VDC / 5-36VDC	5-36VDC
<10%	<10%	<10%
<10mA	<10mA	<10mA
100mA / 200mA	100mA / 200mA	200mA
<0.01mA	<0.01mA	<0.01mA
-	-	-
-	-	-
<1.5V(10-30) or<1.0V(5-36)	<1.5V(10-30) or<1.0V(5-36)	<1.0V
250HZ	250HZ	250HZ
0.5ms/0.5ms	0.5ms/0.5ms	0.5ms/0.5ms
<15%(Sr)	<15%(Sr)	<15%(Sr)
<0.04mm	<0.04mm	<0.04mm
IP67	IP67	IP67
-25°C - +70°C	-25°C - +70°C	-25°C - +70°C
<10%(Sr)	<10%(Sr)	<10%(Sr)
YES	YES	YES
120mA / 220mA	120mA / 220mA	220mA
<10ms	<10ms	<10ms
RFI>3V/m / EFT>1KV / ESD>4KV (contact)	RFI>3V/m / EFT>1KV / ESD>4KV (contact)	RFI>3V/m / EFT>1KV / ESD>4KV (contact)
IEC 60947-5-2,Part 7.4.1 / IEC 60947-5-2,Part 7.4.2	IEC 60947-5-2,Part 7.4.1 / IEC 60947-5-2,Part 7.4.2	IEC 60947-5-2,Part 7.4.1 / IEC 60947-5-2,Part 7.4.2
Polycaribonate	Polycaribonate	Polycaribonate
MQP2-1504N-A3U2F C	MQP2-1504N-A3U2T C	
MQP2-1504N-B3U2F C	MQP2-1504N-B3U2T C	
MQP2-1504P-A3U2F D	MQP2-1504P-A3U2T D	
MQP2-1504P-B3U2F D	MQP2-1504P-B3U2T D	
C IQP2-1504N-A3U2F	C IQP2-1504N-A3U2T	IQP2-156.4N-A3U2F C
C IQP2-1504N-B3U2F	C IQP2-1504N-B3U2T	IQP2-156.4N-B3U2F C
D IQP2-1504P-A3U2F	D IQP2-1504P-A3U2T	IQP2-156.4P-A3U2F D
D IQP2-1504P-B3U2F	D IQP2-1504P-B3U2T	IQP2-156.4P-B3U2F D
MPS Series Wiring diagram number see page L-10. The following page is same.		
3φ3x0.15	3φ3x0.15	3φ3x0.15
approx.20 g	approx.20 g	approx.20 g

MPS SERIES MICRO-PROXIMITY SENSOR DC 3-WIRE NPN/PNP TYPE

MPS-15	MPS-10	
○	○	
6.4mm	2.0mm	
Polycarbonate	Polycarbonate	
●	●	
*: Long sensing range. 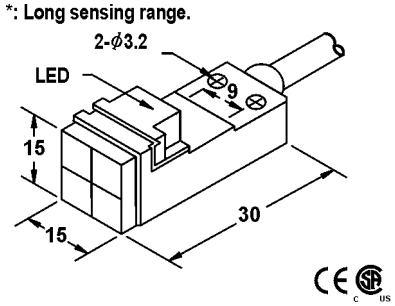 	ϕ 6 screw saat 0.8 deep 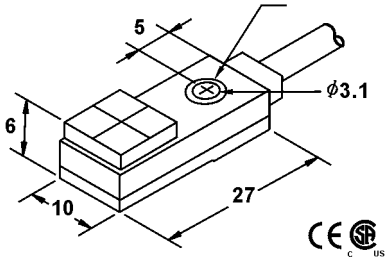 	
5-36VDC	10-30VDC	
<10%	<10%	
<10mA	<10mA	
200mA	100mA	
<0.01mA	<0.01mA	
-	-	
-	-	
<1.0V	<1.5V	
250HZ	250HZ	
0.5ms	0.5ms/0.5ms	
<15%(Sr)	<15%(Sr)	
<0.04mm	<0.04mm	
IP67	IP67	
-25°C - +70°C	-25°C - +70°C	
<10%(Sr)	<10%(Sr)	
YES	YES	
220mA	120mA / 220mA	
<10ms	<10ms	
RFI>3V/m / EFT>1KV / ESD>4KV (contact)	RFI>3V/m / EFT>1KV / ESD>4KV (contact)	
IEC 60947-5-2,Part 7.4.1 / IEC 60947-5-2,Part 7.4.2	IEC 60947-5-2,Part 7.4.1 / IEC 60947-5-2,Part 7.4.2	
Polycarbonate	Polycarbonate	
	MQP2-1002N-A3U2F C	
	MQP2-1002N-B3U2F C	
	MQP2-1002P-A3U2F D	
	MQP2-1002P-B3U2F D	
IQP2-156.4N-A3U2T C		
IQP2-156.4N-B3U2T C		
IQP2-156.4P-A3U2T D		
IQP2-156.4P-B3U2T D		
MPS Series Wiring diagram number see page L-10 The following page is same.		
3ϕ3x0.15	3ϕ3x0.15	
approx.20 g	approx.20 g	

LONG SENSING DISTANCE DC 2-WIRE TYPE

MPS-10	MPS-12	MPS-12
○	○	○
6mm	6mm	6mm
Polycarbonate	Polycarbonate	Polycarbonate
●	●	●
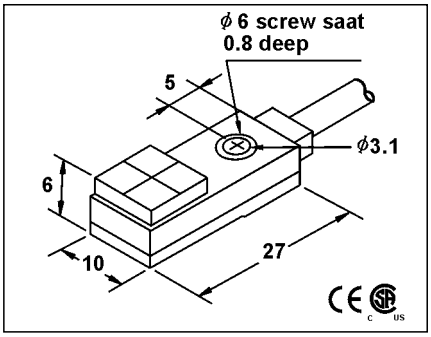	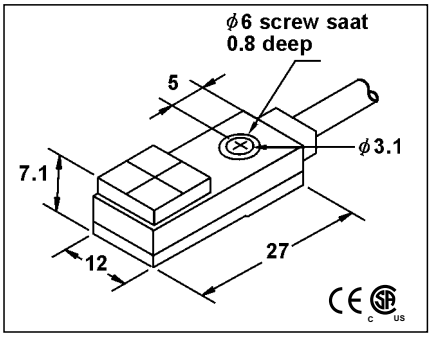	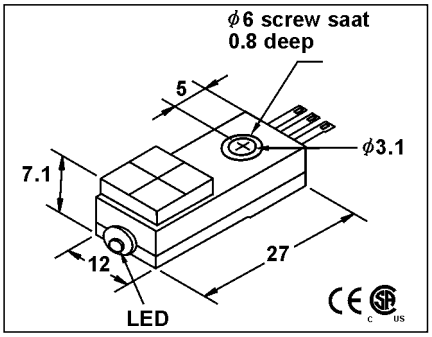
10-30V DC ±10%	10-30V DC ±10%	10-30V DC ±10%
<10%	<10%	<10%
<10mA	<0.8mA	<0.8mA
100mA	100mA	100mA
<0.01mA	<0.8mA	<0.8mA
-	-	-
-	3mA	3mA
<6V	<6V	<6V
1KHZ	1KHZ	1KHZ
0.2ms/0.2ms	0.2ms/0.2ms	0.2ms/0.2ms
<15%(Sr)	<15%(Sr)	<15%(Sr)
<0.04mm	<0.04mm	<0.04mm
IP67	IP67	IP67
-25°C - +70°C	-25°C - +70°C	-25°C - +70°C
<10%(Sr)	<10%(Sr)	<10%(Sr)
YES	YES	YES
120mA	120mA	120mA
<10ms	<10ms	<10ms
RFI>3V/m / EFT>1KV / ESD>4KV (contact)	RFI>3V/m / EFT>1KV / ESD>4KV (contact)	RFI>3V/m / EFT>1KV / ESD>4KV (contact)
IEC 60947-5-2,Part 7.4.1 / IEC 60947-5-2,Part 7.4.2	IEC 60947-5-2,Part 7.4.1 / IEC 60947-5-2,Part 7.4.2	IEC 60947-5-2,Part 7.4.1 / IEC 60947-5-2,Part 7.4.2
Polycarbonate	Polycarbonate	Polycarbonate
MQP2-1006C-A2U2F A	MQP2-1206C-A2U2F A	MQP2-1206C-ANU3F B
MQP2-1006C-B2U2F A	MQP2-1206C-B2U2F A	MQP2-1206C-BNU3F B
		MCP1-1202C-ANU3F 3 PIN connector type see page xxx.
3φ2x0.15	3φ2x0.15	
approx.18 g	approx.20 g	approx.5 g

LONG SENSING DISTANCE DC 2-WIRE TYPE

MPS-15	MPS-15	MPS-15
○	○	○
8mm	8mm	12mm
Polycarbonate	Polycarbonate	Polycarbonate
●	●	●
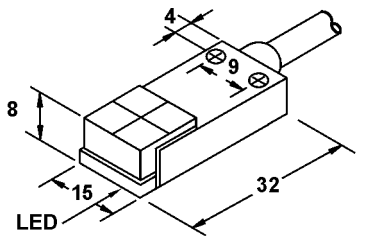	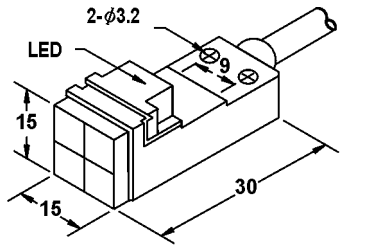	*: Long sensing range. 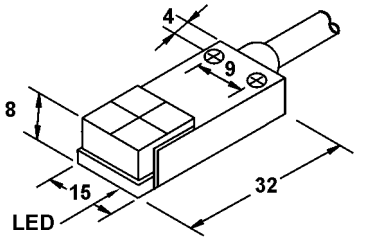
10-30V DC ±10%	10-30V DC ±10%	10-30V DC ±10%
<10%	<10%	<10%
<0.8mA	<0.8mA	<0.8mA
100mA	100mA	100mA
<0.8mA	<0.8mA	<0.8mA
-	-	-
3mA	3mA	3mA
<6V	<6V	<6V
1KHZ	1KHZ	1KHZ
0.2ms/0.2ms	0.2ms/0.2ms	0.2ms/0.2ms
<15%(Sr)	<15%(Sr)	<15%(Sr)
<0.04mm	<0.04mm	<0.04mm
IP67	IP67	IP67
-25°C - +70°C	-25°C - +70°C	-25°C - +70°C
<10%(Sr)	<10%(Sr)	<10%(Sr)
YES	YES	YES
120mA	120mA	120mA
<10ms	<10ms	<10ms
RFI>3V/m / EFT>1KV / ESD>4KV (contact)	RFI>3V/m / EFT>1KV / ESD>4KV (contact)	RFI>3V/m / EFT>1KV / ESD>4KV (contact)
IEC 60947-5-2,Part 7.4.1 / IEC 60947-5-2,Part 7.4.2	IEC 60947-5-2,Part 7.4.1 / IEC 60947-5-2,Part 7.4.2	IEC 60947-5-2,Part 7.4.1 / IEC 60947-5-2,Part 7.4.2
Polycarbonate	Polycarbonate	Polycarbonate
MQP2-1508C-A2U2F A	MQP2-1508C-A2U2T A	MQP2-1512C-A2U2F A
MQP2-1508C-B2U2F A	MQP2-1508C-B2U2T A	MQP2-1512C-B2U2F A
MPS Series Wiring diagram number see page L-10 The following page is same.		
3φ2x0.15	3φ2x0.15	3φ2x0.15
approx.20 g	approx.20 g	approx.20 g

LONG SENSING DISTANCE DC 2-WIRE TYPE

MPS-15		
○		
12mm		
Polycarbonate		
●		

*: Long sensing range.

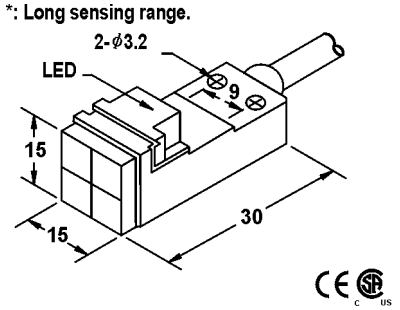

10-30V DC ±10%		
<10%		
<10mA		
100mA		
<0.01mA		
-		
-		
<6V		
1KHZ		
0.2ms/0.2ms		
<15%(Sr)		
<0.04mm		
IP67		
-25 ° C - +70 ° C		
<10%(Sr)		
YES		
120mA		
<10ms		
RFI>3V/m / EFT>1KV / ESD>4KV (contact)		
IEC 60947-5-2,Part 7.4.1 / IEC 60947-5-2,Part 7.4.2		
Polycarbonate		

MQP2-1512C-A2U2T	A		
MQP2-1512C-B2U2T	A		

MPS Series Wiring diagram number see page L-10 The following page is same.		
3φ2x0.15		
approx.20 g		

LONG SENSING DISTANCE DC 3-WIRE NPN/PNP TYPE

MPS-10	MPS-12	MPS-12
○	○	○
6mm	6mm	6mm
Polycarbonate	Polycarbonate	Polycarbonate
●	●	●
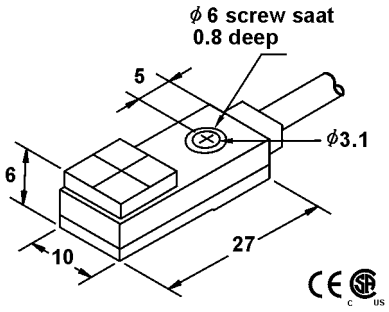	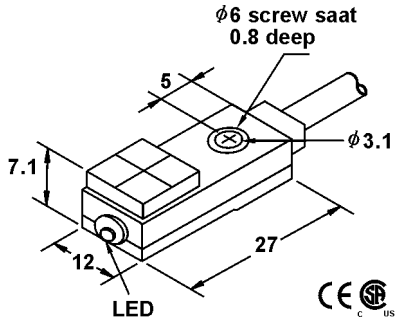	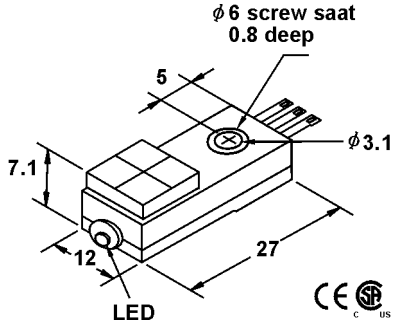
10-30VDC	10-30VDC / 5-36VDC	10-30VDC / 5-36VDC
<10%	<10%	<10%
<10mA	<10mA	<10mA
100mA	100mA / 200mA	100mA / 200mA
<0.01mA	<0.01mA	<0.01mA
-	-	-
-	-	-
<1.5V	<1.5V(10-30V) or <1.0V(5-36v)	<1.5V(10-30V) or <1.0V(5-36v)
250HZ	500HZ	500HZ
0.5ms/0.5ms	0.5ms/0.5ms	0.5ms/0.5ms
<15%(Sr)	<15%(Sr)	<15%(Sr)
<0.04mm	<0.04mm	<0.04mm
IP67	IP67	IP67
-25°C - +70°C	-25°C - +70°C	-25°C - +70°C
<10%(Sr)	<10%(Sr)	<10%(Sr)
YES	YES	YES
120mA / 220mA	120mA / 220mA	120mA / 220mA
<10ms	<10ms	<10ms
RFI>3V/m / EFT>1KV / ESD>4KV (contact)	RFI>3V/m / EFT>1KV / ESD>4KV (contact)	RFI>3V/m / EFT>1KV / ESD>4KV (contact)
IEC 60947-5-2,Part 7.4.1 / IEC 60947-5-2,Part 7.4.2	IEC 60947-5-2,Part 7.4.1 / IEC 60947-5-2,Part 7.4.2	IEC 60947-5-2,Part 7.4.1 / IEC 60947-5-2,Part 7.4.2
Polycarbonate	Polycarbonate	Polycarbonate
MQP2-1006N-A3U2F C	MQP2-1206N-A3U2F C	MQP2-1206N-ANU3F E
MQP2-1006N-B3U2F C	MQP2-1206N-B3U2F C	MQP2-1206N-BNU3F E
MQP2-1006P-A3U2F D	MQP2-1206P-A3U2F D	MQP2-1206P-ANU3F F
MQP2-1006P-B3U2F D	MQP2-1206P-B3U2F D	MQP2-1206P-BNU3F F
	C IQP2-1206N-A3U2F	E IQP2-1206N-ANU3F
	C IQP2-1206N-B3U2F	E IQP2-1206N-BNU3F
	D IQP2-1206P-A3U2F	F IQP2-1206P-ANU3F
	D IQP2-1206P-B3U2F	F IQP2-1206P-BNU3F
		MCP2-1202N-ANU3F 3 PIN connector type see page L-10
3φ3x0.15	3φ3x0.15	
approx.20 g	approx.20 g	approx.5 g

LONG SENSING DISTANCE DC 3-WIRE NPN/PNP TYPE

MPS-15	MPS-15	MPS-15
○	○	○
8mm	8mm	12mm
Polycaribonate	Polycaribonate	Polycaribonate
●	●	●
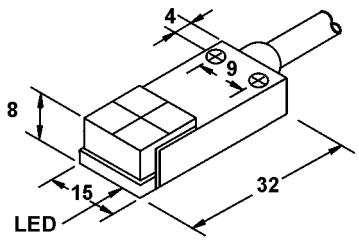	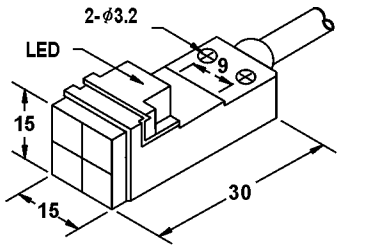	*: Long sensing range. 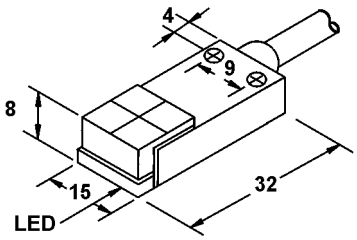
10-30VDC / 5-36VDC	10-30VDC / 5-36VDC	5-36VDC
<10%	<10%	<10%
<10mA	<10mA	<10mA
100mA / 200mA	100mA / 200mA	200mA
<0.01mA	<0.01mA	<0.01mA
-	-	-
-	-	-
<1.5V(10-30) or<1.0V(5-36)	<1.5V(10-30) or<1.0V(5-36)	<1.0V
250HZ	250HZ	250HZ
0.5ms/0.5ms	0.5ms/0.5ms	0.5ms/0.5ms
<15%(Sr)	<15%(Sr)	<15%(Sr)
<0.04mm	<0.04mm	<0.04mm
IP67	IP67	IP67
-25°C - +70°C	-25°C - +70°C	-25°C - +70°C
<10%(Sr)	<10%(Sr)	<10%(Sr)
YES	YES	YES
120mA / 220mA	120mA / 220mA	220mA
<10ms	<10ms	<10ms
RFI>3V/m / EFT>1KV / ESD>4KV (contact)	RFI>3V/m / EFT>1KV / ESD>4KV (contact)	RFI>3V/m / EFT>1KV / ESD>4KV (contact)
IEC 60947-5-2,Part 7.4.1 / IEC 60947-5-2,Part 7.4.2	IEC 60947-5-2,Part 7.4.1 / IEC 60947-5-2,Part 7.4.2	IEC 60947-5-2,Part 7.4.1 / IEC 60947-5-2,Part 7.4.2
Polycaribonate	Polycaribonate	Polycaribonate
MQP2-1508N-A3U2F C	MQP2-1508N-A3U2T C	
MQP2-1508N-B3U2F C	MQP2-1508N-B3U2T C	
MQP2-1508P-A3U2F D	MQP2-1508P-A3U2T D	
MQP2-1508P-B3U2F D	MQP2-1508P-B3U2T D	
C IQP2-1508N-A3U2F	C IQP2-1508N-A3U2T	IQP2-1512N-A3U2F C
C IQP2-1508N-B3U2F	C IQP2-1508N-B3U2T	IQP2-1512N-B3U2F C
D IQP2-1508P-A3U2F	D IQP2-1508P-A3U2T	IQP2-1512P-A3U2F D
D IQP2-1508P-B3U2F	D IQP2-1508P-B3U2T	IQP2-1512P-B3U2F D
MPS Series Wiring diagram number see page L-10. The following page is same.		
3φ3x0.15	3φ3x0.15	3φ3x0.15
approx.20 g	approx.20 g	approx.20 g

LONG SENSING DISTANCE DC 3-WIRE NPN/PNP TYPE

MPS-15	
○	
12mm	
Polycarbonate	
●	

*: Long sensing range.

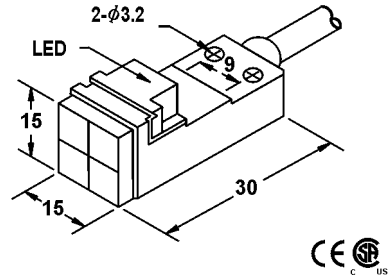

5-36VDC	
<10%	
<10mA	
200mA	
<0.01mA	
-	
-	
<1.0V	
250HZ	
0.5ms	
<15%(Sr)	
<0.04mm	
IP67	
-25°C - +70°C	
<10%(Sr)	
YES	
220mA	
<10ms	
RFI>3V/m / EFT>1KV / ESD>4KV (contact)	
IEC 60947-5-2,Part 7.4.1 / IEC 60947-5-2,Part 7.4.2	
Polycarbonate	

MQP2-1512N-A3U2T	C
MQP2-1512N-B3U2T	C
MQP2-1512P-A3U2T	D
MQP2-1512P-B3U2T	D

MPS Series Wiring diagram number see page L-10 The following page is same.

3ϕ3x0.15
approx.20 g

I/O CIRCUIT AND WIRING DIAGRAMS

(A) DC 2-WIRE

Cable type

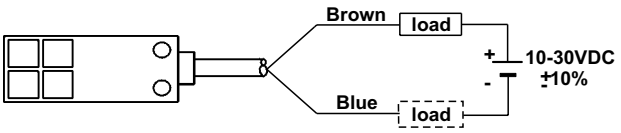

WIRING DIAGRAM

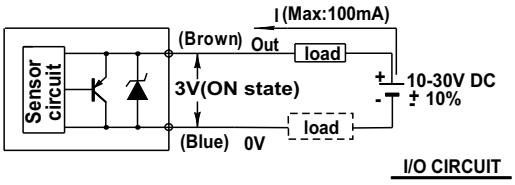

I/O CIRCUIT

(B) DC 2-WIRE

Connector type

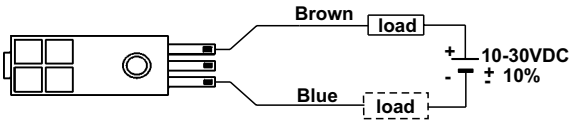

WIRING DIAGRAM

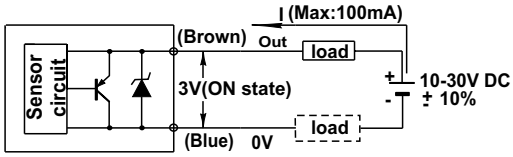

I/O CIRCUIT

(C) NPN OUTPUT

Cable type

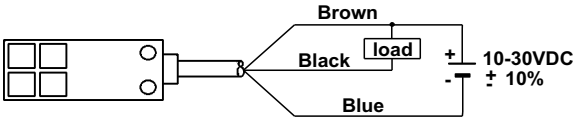

WIRING DIAGRAM

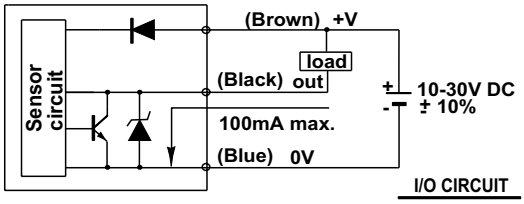

I/O CIRCUIT

(D) PNP OUTPUT

Cable type

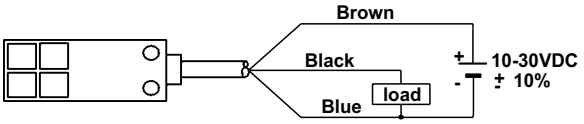

WIRING DIAGRAM

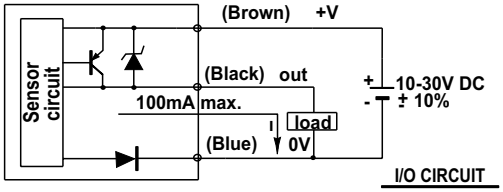

I/O CIRCUIT

(E) NPN OUTPUT

Connector type

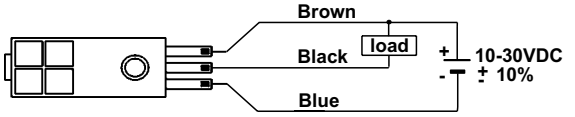

WIRING DIAGRAM

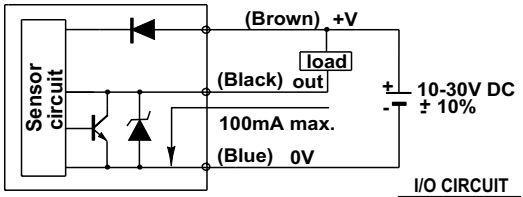

I/O CIRCUIT

(F) PNP OUTPUT

Connector type

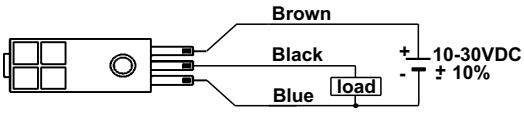

WIRING DIAGRAM

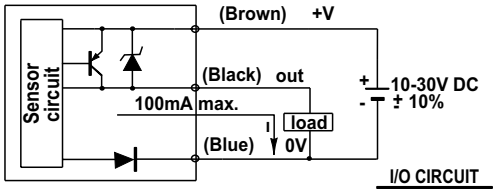

I/O CIRCUIT

OPTIONNAL COMPONENTS

	Component	Model name	Description
1	Connector	SN-13	Connect for the terminal type
2		SN-13-C1(C3)	cable for the terminal type C1=1m Length C3=3m Length
3	Sensor mounting bracket	SS-MPS8-3	Mounting bracket for MPS-8 type
4		SS-MPS6-2	Mounting bracket for MPS-6 type
5		SS-MPS15-2	Mounting bracket for MPS-15 type
6		SS-MPS12-2	Mounting bracket for MPS-12 type
7		SS-MPS8-4	Mounting bracket for MPS-8-4 type
8		SS-MPS12-1	Mounting bracket for MPS-12 type
9		SS-MPS15	Mounting bracket for MPS-12

(3)

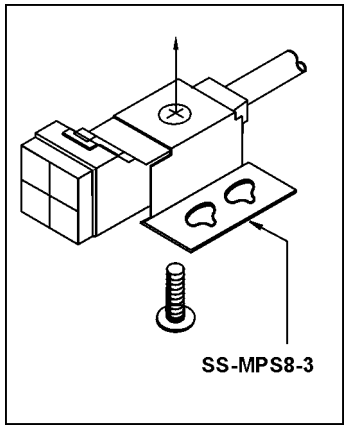

(1)

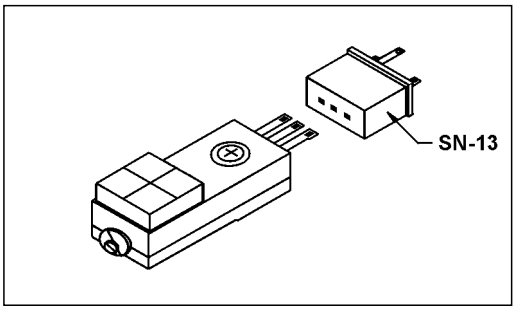

(2)

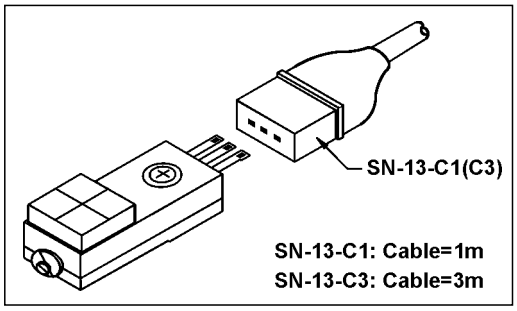

(4)

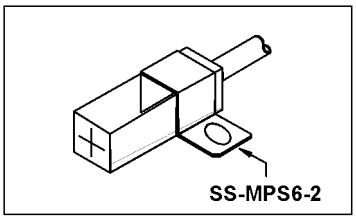

(5)

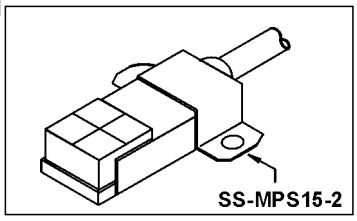

(6)

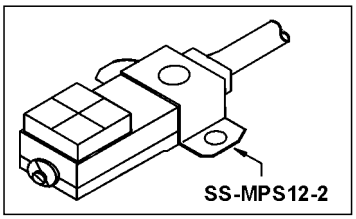

(7)

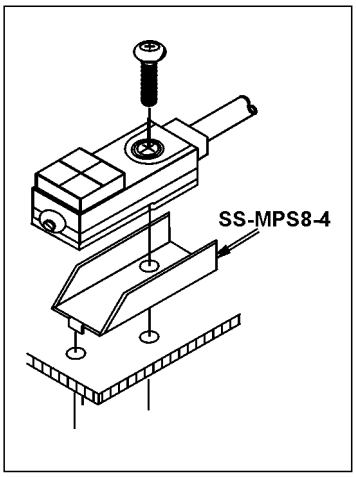

(8)

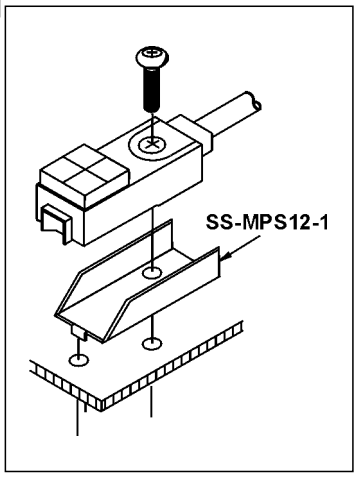

(9)

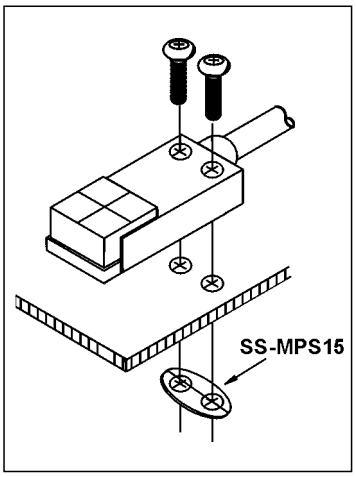

MOUNTING

MPS-6 type

.Mount the sensor with the attached mounting bracket SS-MPS-1 or the optional mounting bracket SS-MPS6-2.

.Prepare a screw, a nut, and a washer that you may have, as they are not attached.

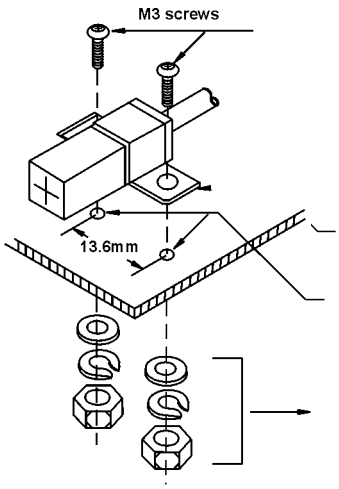

.To mount the sensor with a nut, the thru-hole diameter should be ϕ3.4 mm.

MPS-8 type

.The tightening torque should be 0.5N.m(5.1kgf.cm) or less.

.To mount the sensor with a nut, the thru-hole diameter should be ϕ3.4mm. with the attached mounting screw and nut, the thickness of a mounting plate should be 2.3mm or less.

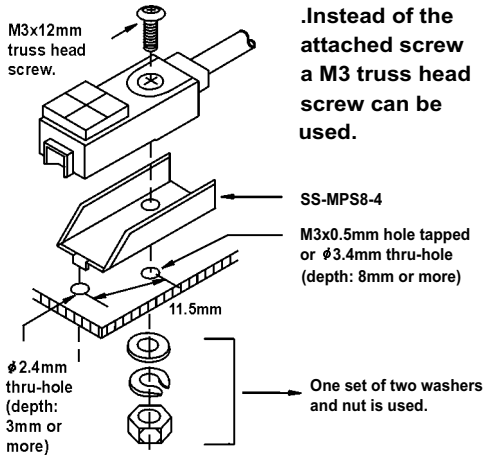

.Instead of the attached screw a M3 truss head screw can be used.

MPS-12 type

.The tightening torque should be 0.49N-M or less.

.To mount the sensor with a nut, the thru-hole diameter should be ϕ 3.4mm.

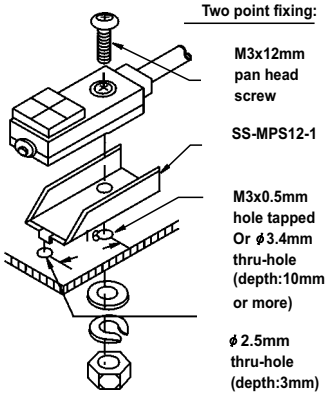

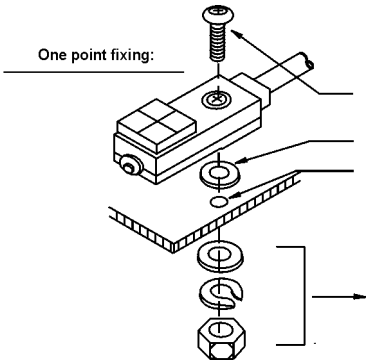

MPS-15 type

.The tightening torque dhould be 1N-m(10.2kgf.cm) or less.

.To mount the sensor with the optionnal mounting bracket SS-MPS15, the thru-hole diameter should be ϕ3.4mm.

.No screw, nut, nor washer is supplied.

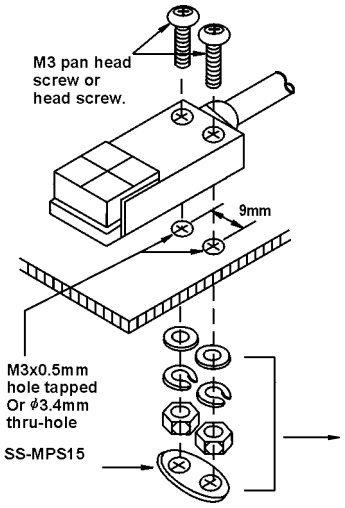

.To mount the long sensing range mps-15 on a ferrous metal such as iron steel, the attached aluminum sheet or your original aluminum sheet 30x39.5 x0.3mm in the minimum should be inserted between the sensor and the metal (aluminum sheet 30x30x0.3mm in the minimum for the MPS-15).

PRECAUTIONS FOR PROPER USE

Influence by surrounding metal

.When there are metals near the sensor, keep the separation distance specified below at the minimum

Front sensing:

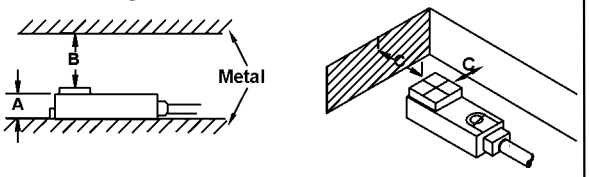

	MPS-6	MPS-8	MPS-12	MPS-15	MPS-15L
A	6mm	7mm	7mm	8mm	8mm *
B	8mm	8mm	20mm	20mm	30mm
C	3mm	3mm	10mm	7mm	10mm

*: The MPS-15L should be mounted on an insulator or a non-ferrous metal. To mount it on a ferrous metal such as iron steel, use the attached aluminum sheet.

Top sensing:

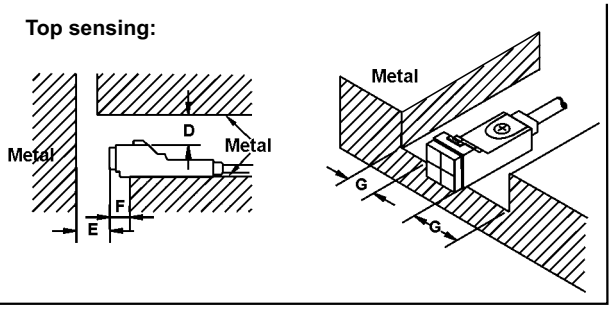

	MPS-6	MPS-8	MPS-15	MPS-15L
D	3mm	4mm	6mm	12mm
E	10mm	10mm	20mm	30mm
F	2mm	3mm	0mm	10mm *
G	2mm	3mm	3mm	10mm

*: When the MPS-15L is mounted on an insulator or a nonferrous metal. or seated on the attached aluminum sheet, the separation distance "F" can be neglected.

DC 2-wire type connection

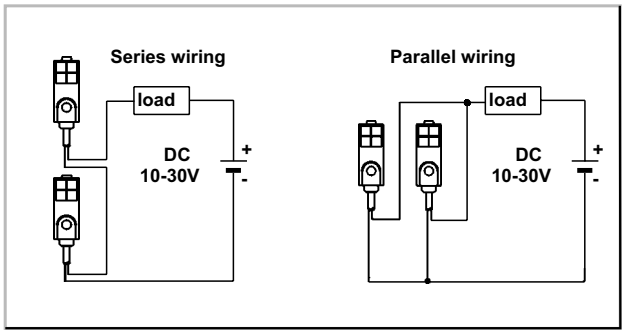

Crosstalk prevention

.When two or more sensors are installed in parallel or face to face, keep the separation distance specified below at the minimum to avoid crosstalk.

Front sensing:

Top sensing:

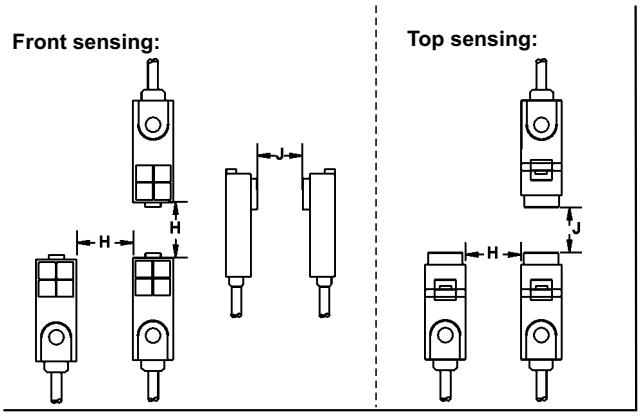

	MPS-6	MPS-8	MPS-12	MPS-15	MPS-15L
H	13mm	12mm	20mm	25mm	25mm
J	25mm	30mm	40mm	60mm	90mm

Sensing range

.The sensing range is specified with using the standard sensing object. With a non-ferrous object, the sensing range is obtained by multiplying the correction coefficient specified below. (When an object is plated, the sensing range differs.)

Correction coefficient 1:

Model No. / Metal	MPS-6	MPS-8 (2-Way)	MPS-8 (3-Way)	MPS-12
Iron steel	1	1	1	1
Stainless steel	appror. 0.76	appror. 0.82	appror. 0.76	appror. 0.70
Brass	appror. 0.55	appror. 0.59	appror. 0.50	appror. 0.40
Aluminum	appror. 0.52	appror. 0.57	appror. 0.48	appror. 0.35

Correction coefficient 2:

Model No. / Metal	MPS-15 (2-Way)	MPS-15 (3-Way)	MPS-15L (2-Way)	MPS-15L (3-Way)
Iron steel	1	1	1	1
Stainless steel	appror. 0.74	appror. 0.68	appror. 0.75	appror. 0.76
Brass	appror. 0.53	appror. 0.47	appror. 0.53	appror. 0.50
Aluminum	appror. 0.52	appror. 0.45	appror. 0.51	appror. 0.48

Standard sensing object

MPS-6	MPS-8	MPS-12	MPS-15	MPS-15L
iron steel 12 x 12 x t1mm	iron steel 15 x 15 x t1mm	iron steel 20 x 20 x t1mm	iron steel 20 x 20 x t1mm	iron steel 30 x 30 x t1mm

DIMENSIONS (Unit : mm)

MPS-6 (Front sensing)

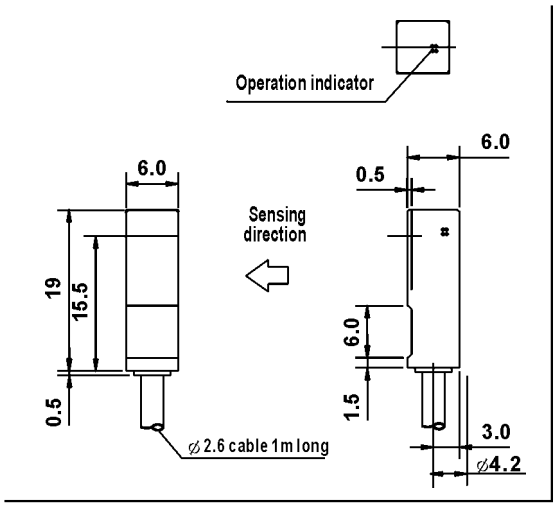

MPS-6 (Top sensing)

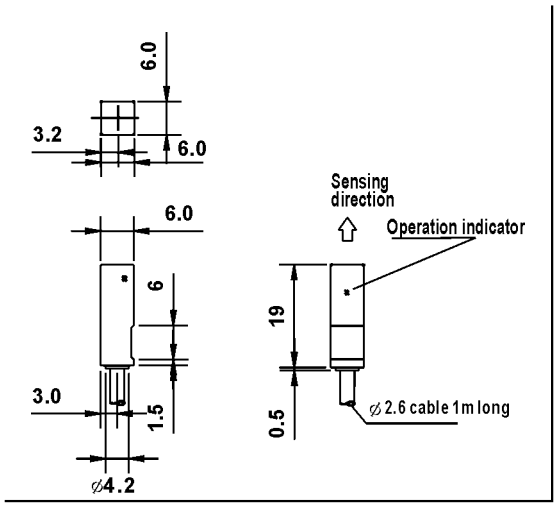

MPS-8 (Front sensing)

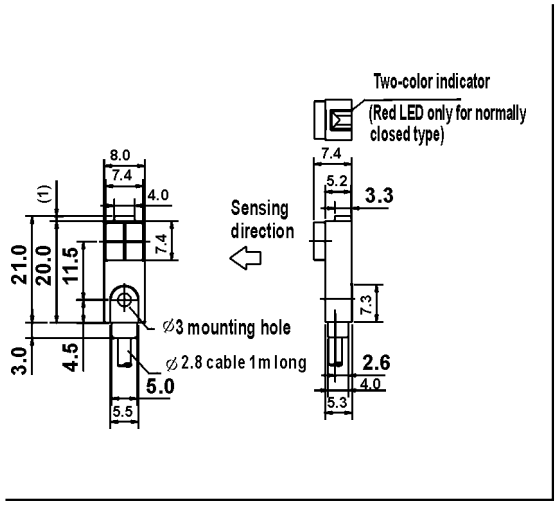

MPS-8 (Top sensing)

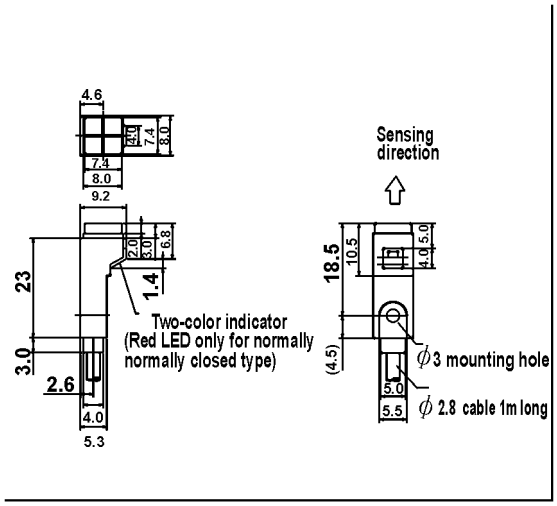

MPS-12 (Front sensing)

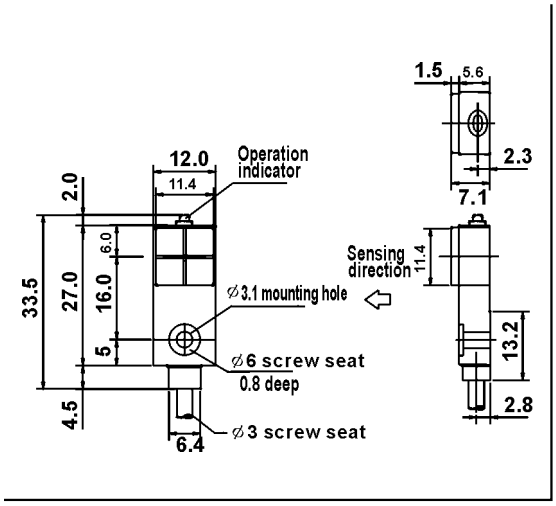

MPS-12 (Connector)

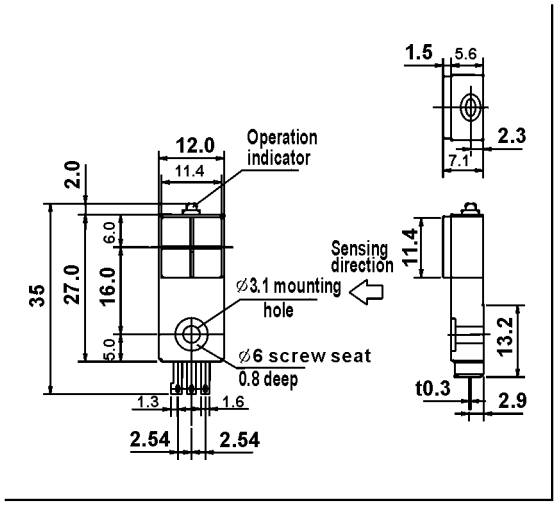

DIMENSIONS (Unit : mm)

MPS-15 (Front sensing)

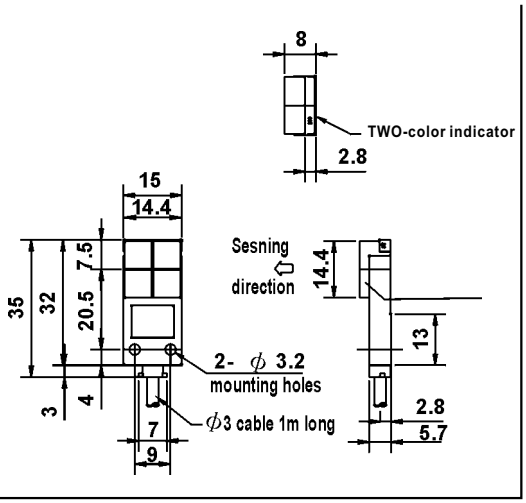

MPS-15 (Top sensing)

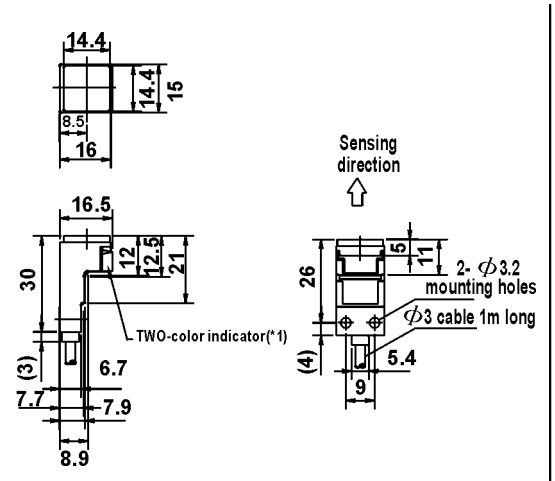

SS-MPS6-1

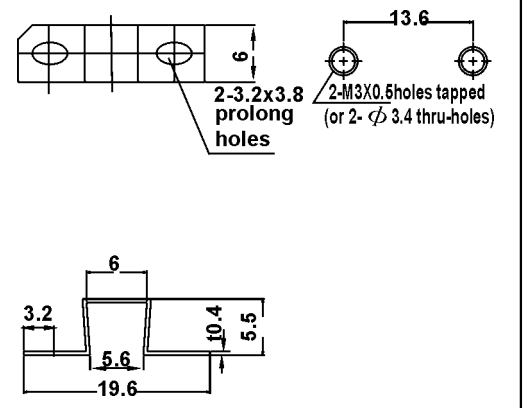

SS-MPS6-2

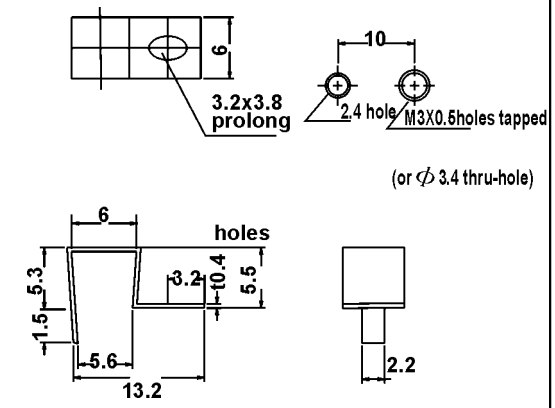

SS-MPS8-4

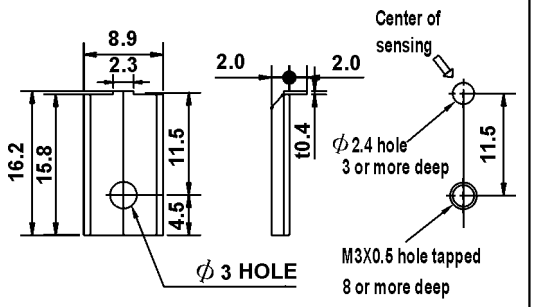

Material: spcc (Nickel plated)

M3x12mm truss head screw, nut sping washer and flat washer are attached one each

SS-MPS8

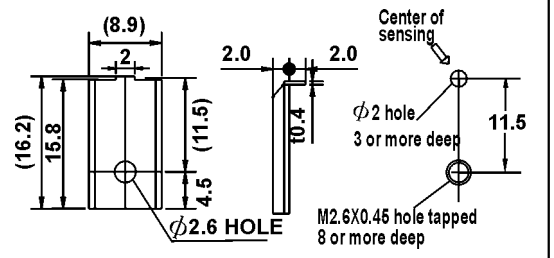

Material: SPCC (Nickel plated)

M2.6x12mm truss head screw, nut sping washer and flat washer are attached one each

DIMENSIONS (Unit : mm)

SS-MPS12-1

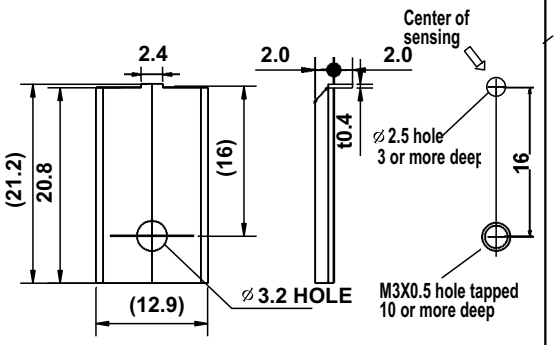

Material: SPCC (Nickel plated)

SS-R1

Rubber washer for mps-12 type

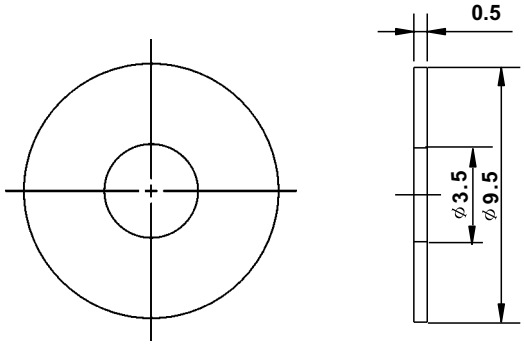

Material: NBR

SS-MPS8-3

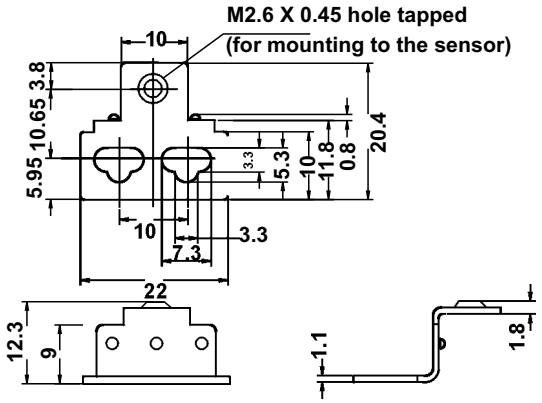

Material: Stainless steel (SUS304)
One M2.6 X 8mm pan head screw and two
M3 X 8mm screws with washers are attached.

SS-MPS12-2

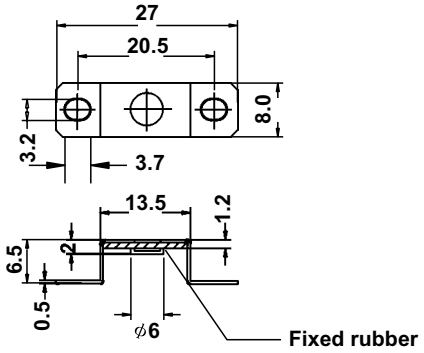

Material: Metai stainless steel (SUS304)
Fixed rubber FKM(Fluorine rubber)

SS-MPS15

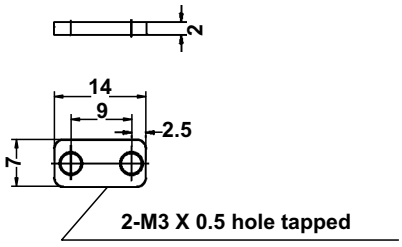

Material: SPCC

SS-MPS15-2

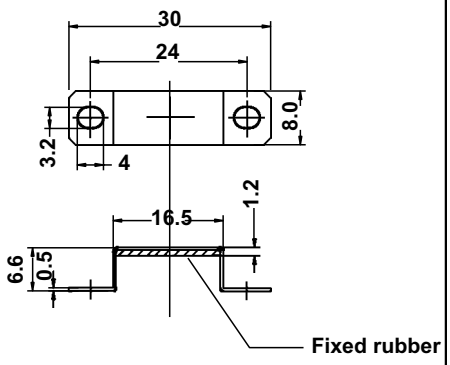

Material: Metai stainless steel (SUS304)
Fixed rubber FKM(Fluorine rubber)

DIMENSIONS (Unit : mm) AND SENSING CHARACTERISTICS

SN-13

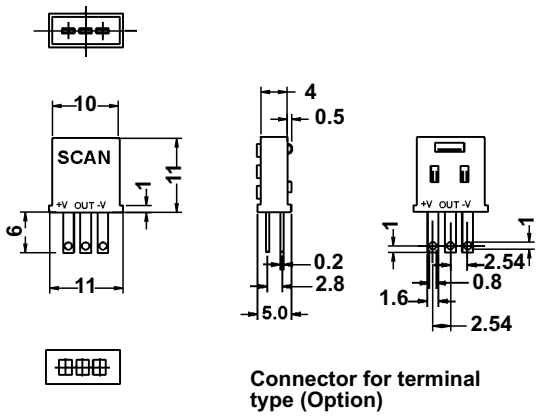

SS-A15F/SS-A15H

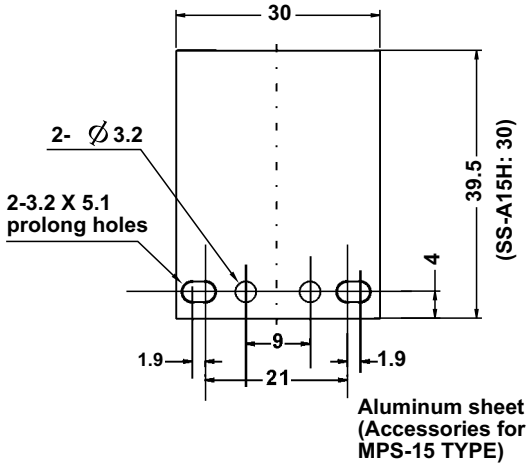

TYPICAL SENSING CHARACTERISTICS

(These are typical sensing range,and are subject to slight changes from model to model.)

. Sensing range characteristics

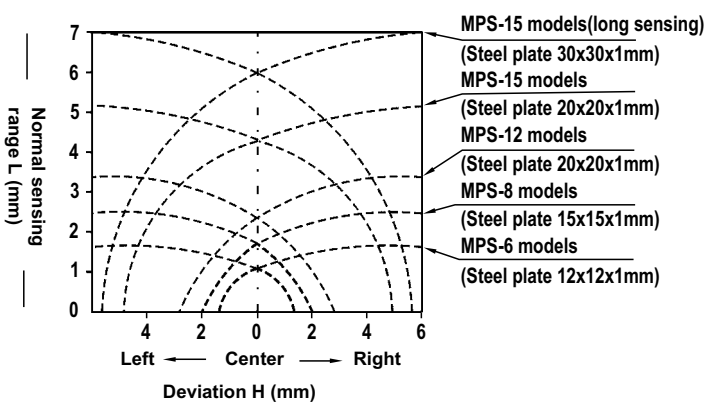

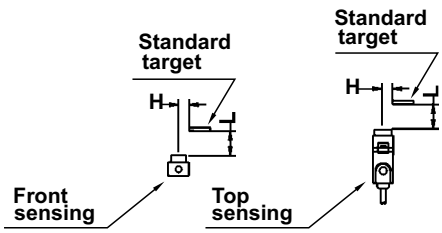
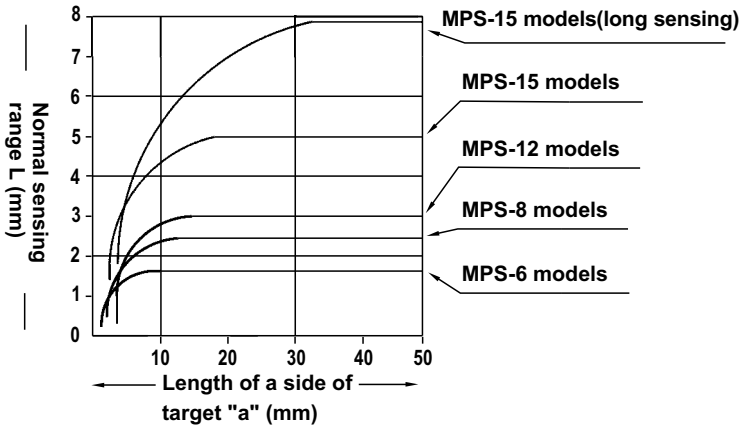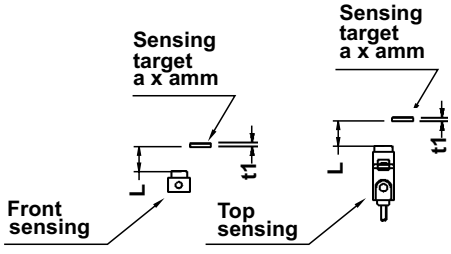
. Target size - Sensing range correlation