PART X-01 ~ X-11

Diameter

● Shielded ○ non-Shielded
Switching Distance Sn mm
Housing Material
● With LED ○ Without LED

Dimensions (unit: mm)

Operating
Ripple
NO-load supply current
Max. load current
Off-state current
Voltage drop
Switching frequency
Response Time
Switching Hysteresis
Repeat Accuracy
protection category
Ambient temperature range
Temperature Drift
Short Circuit protected
Overload Trip Point
Protected against polarity reversal
EMC
Shock / Vibration
Material of sening face
Utilization categories
High pressure rated up to

DC 3 wire 10-30V NPN N.O.
DC 3 wire 10-30V NPN N.C.
DC 3 wire 10-30V PNP N.O.
DC 3 wire 10-30V PNP N.C.
DC 4 wire 10-30V Changeover PNP (N.O. & N.C.)
DC 4 wire 10-30V Changeover NPN (N.O. & N.C.)
DC 2 wire 10-60V N.O.
DC 2 wire 10-60V N.C.
DC 3 wire 10-55v NPN N.O.
DC 3 wire 10-55v NPN N.C.
DC 3 wire 10-55v PNP N.O.
DC 3 wire 10-55v PNP N.C.
AC 2 wire 20-250V N.O.
AC 2 wire 20-250V N.C.
AC 2 wire 20-250V N.O. or N.C. Changeable
AC/DC 2 wire 20-250V N.O.
AC/DC 2 wire 20-250V N.C.
AC/DC 2 wire 20-250V N.O. or N.C. Changeable

Remark

Cable 2M (PVC)
Weight

Please put each catalog page in the blank. The specification on the left will help your reading.

DC HIGH PRESSURE RATED SENSORS

WELD FIELD IMMUNE

Φ6.5	M8	M8
●	●	●
1.2 mm	1.2 mm	1.5 mm
SUS 303 stainless steel	SUS 303 stainless steel	SUS 303 stainless steel
○	○	○
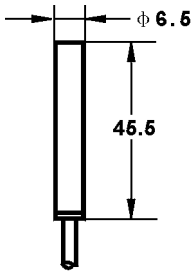	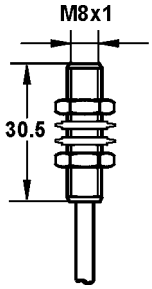	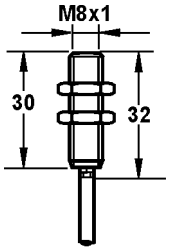
10-30VDC	10-30VDC	10-30VDC
<10%	<10%	<10%
< 10mA	< 10mA	< 10mA
200mA	200mA	200mA
<0.01mA	<0.01mA	<0.01mA
≤ 1.5V	≤ 1.5V	≤ 1.0V
2000Hz	2000Hz	2000Hz
0.1ms/0.1ms	0.1ms/0.1ms	0.1ms/0.1ms
<15%(Sr)	<15%(Sr)	<15%(Sr)
< 1%(Sr)	< 1%(Sr)	< 1%(Sr)
IP 68	IP 68	IP 67
-25...+70°C	-25...+70°C	-25...+70°C
<10%(Sr)	<10%(Sr)	<10%(Sr)
YES	YES	YES
220mA	220mA	220mA
YES	YES	YES
RFI>3V/m / EFT>1KV / ESD>4KV (contact)	RFI>3V/m / EFT>1KV / ESD>4KV (contact)	RFI>3V/m / EFT>1KV / ESD>4KV (contact)
IEC 60947-5-2,Part 7.4.1 / IEC 60947-5-2,Part 7.4.2	IEC 60947-5-2,Part 7.4.1 / IEC 60947-5-2,Part 7.4.2	IEC 60947-5-2,Part 7.4.1 / IEC 60947-5-2,Part 7.4.2
EPOXY	EPOXY	EPOXY
DC13	DC13	DC13
10 bar	10 bar	100 bar
PCU1-D061.2N-A3U2/45 1	PCU1-081.2N-A3S2/30 1	PCU1-081.5N-A3S2/32 1
PCU1-D061.2N-B3U2/45 2	PCU1-081.2N-B3S2/30 2	PCU1-081.5N-B3S2/32 2
PCU1-D061.2P-A3U2/45 3	PCU1-081.2P-A3S2/30 3	PCU1-081.5P-A3S2/32 3
PCU1-D061.2P-B3U2/45 4	PCU1-081.2P-B3S2/30 4	PCU1-081.5P-B3S2/32 4
3ϕ3x0.15	3ϕ3x0.15	3ϕ3x0.15
Approx.36 g	Approx.47 g	Approx.48 g

DC HIGH PRESSURE RATED SENSORS

WELD FIELD IMMUNE

M12	M12	M12
●	●	●
1.5 mm	1.5 mm	2 mm
SUS 303 stainless steel	SUS 303 stainless steel	SUS 303 stainless steel
○	○	
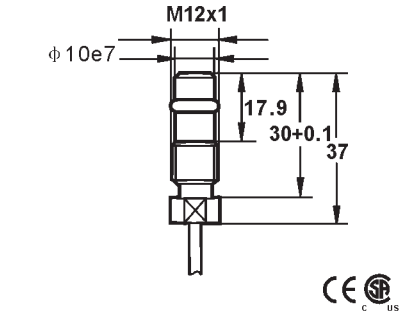	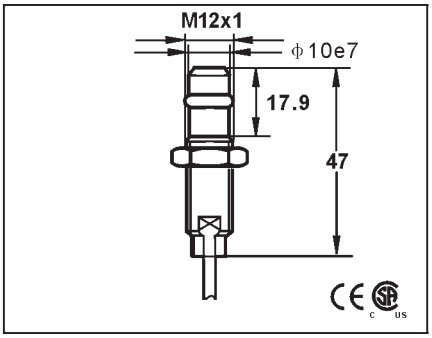	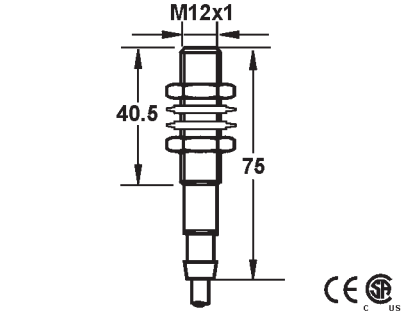
10-30VDC	10-30VDC	10-30VDC
<10%	<10%	<10%
< 10mA	< 10mA	< 10mA
200mA	200mA	200mA
<0.01mA	<0.01mA	<0.01mA
≤ 1.0V	≤ 1.0V	≤ 1.5V
2000Hz	2000Hz	2000Hz
0.1ms/0.1ms	0.1ms/0.1ms	0.1ms/0.1ms
<15%(Sr)	<15%(Sr)	<15%(Sr)
< 1%(Sr)	< 1%(Sr)	< 1%(Sr)
IP 68	IP 68	IP 68
-25...+70°C	-25...+70°C	-25...+70°C
<10%(Sr)	<10%(Sr)	<10%(Sr)
YES	YES	YES
220mA	220mA	220mA
YES	YES	YES
RFI>3V/m / EFT>1KV / ESD>4KV (contact)	RFI>3V/m / EFT>1KV / ESD>4KV (contact)	RFI>3V/m / EFT>1KV / ESD>4KV (contact)
IEC 60947-5-2,Part 7.4.1 / IEC 60947-5-2,Part 7.4.2	IEC 60947-5-2,Part 7.4.1 / IEC 60947-5-2,Part 7.4.2	IEC 60947-5-2,Part 7.4.1 / IEC 60947-5-2,Part 7.4.2
EPOXY	EPOXY	EPOXY
DC13	DC13	DC13
350 bar	100 bar	10 bar
PCU1-121.5N-A3U2/37 1	PCU1-121.5N-A3U2/47 1	PCU1-1202N-A3U2/75 1
PCU1-121.5N-B3U2/37 2	PCU1-121.5N-B3U2/47 2	PCU1-1202N-B3U2/75 2
PCU1-121.5P-A3U2/37 3	PCU1-121.5P-A3U2/47 3	PCU1-1202P-A3U2/75 3
PCU1-121.5P-B3U2/37 4	PCU1-121.5P-B3U2/47 4	PCU1-1202P-B3U2/75 4
Installatin: 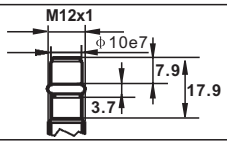	Installatin: 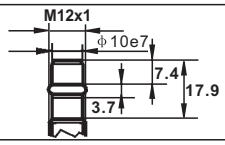	
4∅3x0.15	4∅3x0.15	4∅3x0.15
Approx.60 g	Approx.67 g	Approx.97 g

DC HIGH PRESSURE RATED SENSORS

WELD FIELD IMMUNE

M12	M12	M12
●	●	●
2 mm	1.5 mm	1.5 mm
SUS 303 stainless steel	SUS 303 stainless steel	SUS 303 stainless steel
○	○	○
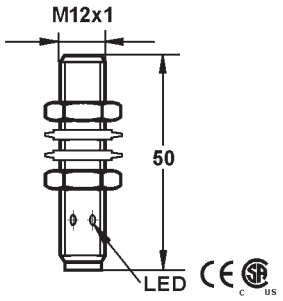	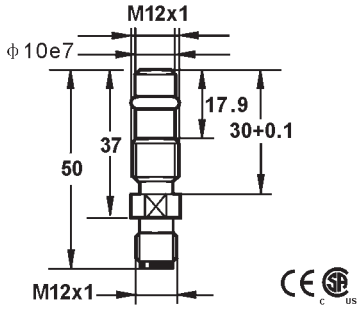	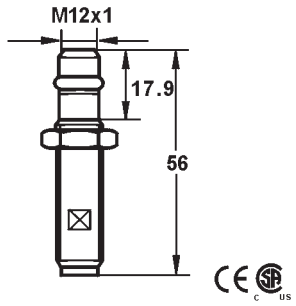
10-30VDC	10-30VDC	10-30VDC
<10%	<10%	<10%
< 10mA	< 10mA	< 10mA
200mA	200mA	200mA
<0.01mA	<0.01mA	<0.01mA
≤ 1.5V	≤ 1.5V	≤ 1.5V
2000Hz	2000Hz	1000Hz
0.1ms/0.1ms	0.1ms/0.1ms	0.2ms/0.2ms
<15%(Sr)	<15%(Sr)	<15%(Sr)
< 1%(Sr)	< 1%(Sr)	< 1%(Sr)
IP 68	IP 68	IP 68
-25...+70°C	-25...+70°C	-25...+70°C
<10%(Sr)	<10%(Sr)	<10%(Sr)
YES	YES	YES
220mA	220mA	220mA
YES	YES	YES
RFI>3V/m / EFT>1KV / ESD>4KV (contact)	RFI>3V/m / EFT>1KV / ESD>4KV (contact)	RFI>3V/m / EFT>1KV / ESD>4KV (contact)
IEC 60947-5-2,Part 7.4.1 / IEC 60947-5-2,Part 7.4.2	IEC 60947-5-2,Part 7.4.1 / IEC 60947-5-2,Part 7.4.2	IEC 60947-5-2,Part 7.4.1 / IEC 60947-5-2,Part 7.4.2
EPOXY	EPOXY	EPOXY
DC13	DC13	DC13
10 bar	500 bar	10 bar

PCU1-1202N-ARU4/50	29	PCU1-121.5N-ARU4/50	29	PCU1-121.5N-ARU4/56	29
PCU1-1202N-BRU4/50	30	PCU1-121.5N-BRU4/50	30	PCU1-121.5N-BRU4/56	30
PCU1-1202P-ARU4/50	31	PCU1-121.5P-ARU4/50	31	PCU1-121.5P-ARU4/56	31
PCU1-1202P-BRU4/50	32	PCU1-121.5P-BRU4/50	32	PCU1-121.5P-BRU4/56	32

	Installatin: 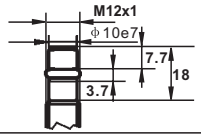	Installatin: 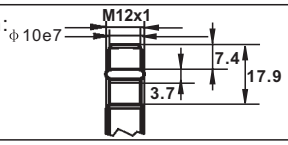
4Ø3x0.15		
Approx.25 g	Approx.25 g	Approx.28 g

DC HIGH PRESSURE RATED SENSORS

WELD FIELD IMMUNE

M12	M12	M12
●	●	●
1.5 mm	1.5 mm	1.5 mm
SUS 303 stainless steel	SUS 303 stainless steel	SUS 303 stainless steel
○	○	○
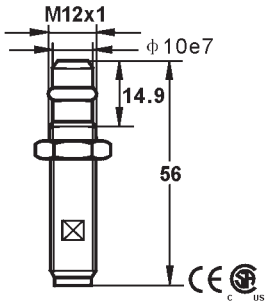	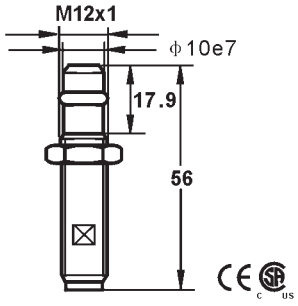	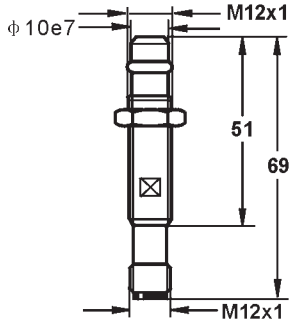
10-30VDC	10-30VDC	10-30VDC
<10%	<10%	<10%
< 10mA	< 10mA	< 10mA
200mA	200mA	200mA
<0.01mA	<0.01mA	<0.01mA
≤ 1.5V	≤ 1.5V	≤ 1.5V
2000Hz	2000Hz	2000Hz
0.1ms/0.1ms	0.1ms/0.1ms	0.1ms/0.1ms
<15%(Sr)	<15%(Sr)	<15%(Sr)
< 1%(Sr)	< 1%(Sr)	< 1%(Sr)
IP 68	IP 68	IP 68
-25...+70°C	-25...+70°C	-25...+70°C
<10%(Sr)	<10%(Sr)	<10%(Sr)
YES	YES	YES
220mA	220mA	220mA
YES	YES	YES
RFI>3V/m / EFT>1KV / ESD>4KV (contact)	RFI>3V/m / EFT>1KV / ESD>4KV (contact)	RFI>3V/m / EFT>1KV / ESD>4KV (contact)
IEC 60947-5-2,Part 7.4.1 / IEC 60947-5-2,Part 7.4.2	IEC 60947-5-2,Part 7.4.1 / IEC 60947-5-2,Part 7.4.2	IEC 60947-5-2,Part 7.4.1 / IEC 60947-5-2,Part 7.4.2
EPOXY	EPOXY	EPOXY
DC13	DC13	DC13
500 bar	500 bar	500 bar
PCU1-121.5N-ARU4/56A 29	PCU1-121.5N-ARU4/56B 29	PCU1-121.5N-ARU4/69A 29
PCU1-121.5N-BRU4/56A 30	PCU1-121.5N-BRU4/56B 30	PCU1-121.5N-BRU4/69A 30
PCU1-121.5P-ARU4/56A 31	PCU1-121.5P-ARU4/56B 31	PCU1-121.5P-ARU4/69A 31
PCU1-121.5P-BRU4/56A 32	PCU1-121.5P-BRU4/56B 32	PCU1-121.5P-BRU4/69A 32
Installatin: 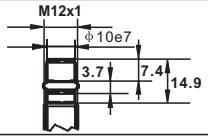	Installatin: 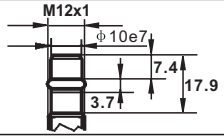	Installatin: 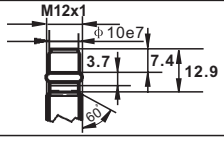
Approx.28 g	Approx.28 g	Approx.46 g

DC HIGH PRESSURE RATED SENSORS

WELD FIELD IMMUNE

M12	M12	M12
●	●	●
1.5 mm	1.5 mm	1.5 mm
SUS 303 stainless steel	SUS 303 stainless steel	SUS 303 stainless steel
○	○	○
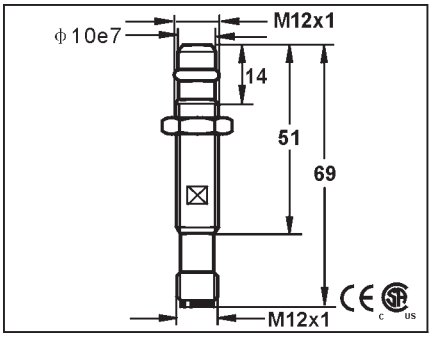	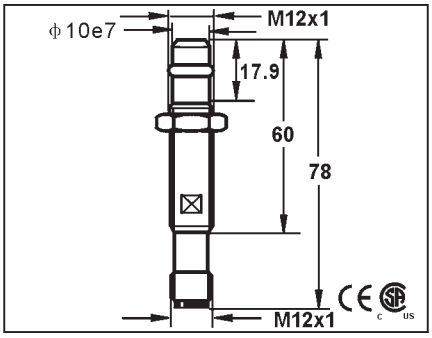	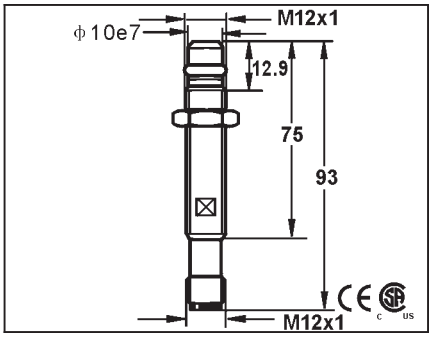
10-30VDC	10-30VDC	10-30VDC
<10%	<10%	<10%
< 10mA	< 10mA	< 10mA
200mA	200mA	200mA
<0.01mA	<0.01mA	<0.01mA
≤ 1.5V	≤ 1.5V	≤ 1.5V
2000Hz	2000Hz	2000Hz
0.1ms/0.1ms	0.1ms/0.1ms	0.1ms/0.1ms
<15%(Sr)	<15%(Sr)	<15%(Sr)
< 1%(Sr)	< 1%(Sr)	< 1%(Sr)
IP 68	IP 68	IP 68
-25...+70°C	-25...+70°C	-25...+70°C
<10%(Sr)	<10%(Sr)	<10%(Sr)
YES	YES	YES
220mA	220mA	220mA
YES	YES	YES
RFI>3V/m / EFT>1KV / ESD>4KV (contact)	RFI>3V/m / EFT>1KV / ESD>4KV (contact)	RFI>3V/m / EFT>1KV / ESD>4KV (contact)
IEC 60947-5-2,Part 7.4.1 / IEC 60947-5-2,Part 7.4.2	IEC 60947-5-2,Part 7.4.1 / IEC 60947-5-2,Part 7.4.2	IEC 60947-5-2,Part 7.4.1 / IEC 60947-5-2,Part 7.4.2
EPOXY	EPOXY	EPOXY
DC13	DC13	DC13
500 bar	500 bar	500 bar

PCU1-121.5N-ARU4/69B	29	PCU1-121.5N-ARU4/78	29	PCU1-121.5N-ARU4/93	29
PCU1-121.5N-BRU4/69B	30	PCU1-121.5N-BRU4/78	30	PCU1-121.5N-BRU4/93	30
PCU1-121.5P-ARU4/69B	31	PCU1-121.5P-ARU4/78	31	PCU1-121.5P-ARU4/93	31
PCU1-121.5P-BRU4/69B	32	PCU1-121.5P-BRU4/78	32	PCU1-121.5P-BRU4/93	32

Installatin: 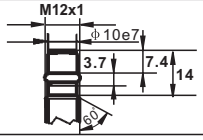	Installatin: 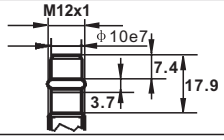	Installatin: 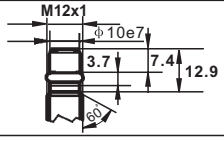
Approx.46 g	Approx.35 g	Approx.46 g

DC HIGH PRESSURE RATED SENSORS

WELD FIELD IMMUNE

M12		ϕ16		M16	
●		●		●	
1.5 mm		1.5 mm		1.5 mm	
SUS 303 stainless steel		SUS 303 stainless steel		SUS 303 stainless steel	
○		○		○	
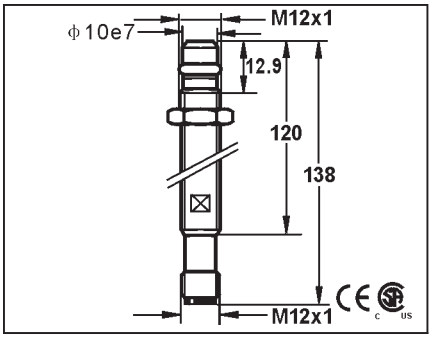		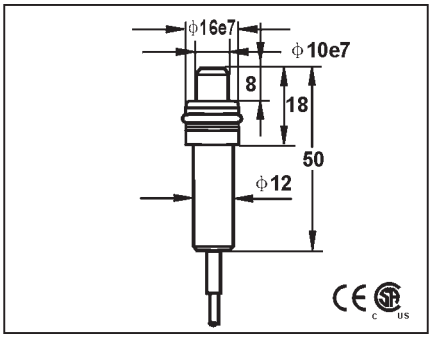		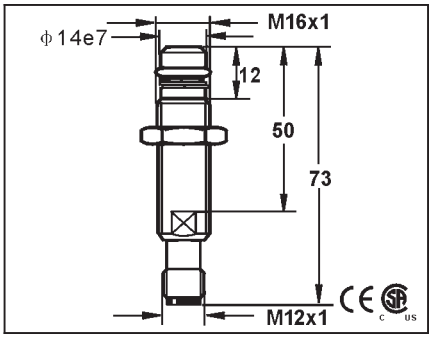	
10-30VDC		10-30VDC		10-30VDC	
<10%		<10%		<10%	
< 10mA		< 10mA		< 10mA	
200mA		200mA		200mA	
<0.01mA		<0.01mA		<0.01mA	
≤ 1.0V		≤ 1.5V		≤ 1.5V	
2000Hz		1000Hz		1000Hz	
0.1ms/0.1ms		0.2ms/0.2ms		0.2ms/0.2ms	
<15%(Sr)		<15%(Sr)		<15%(Sr)	
< 1%(Sr)		< 1%(Sr)		< 1%(Sr)	
IP 68		IP 68		IP 68	
-25...+70°C		-25...+80°C		-25...+80°C	
<10%(Sr)		<10%(Sr)		<10%(Sr)	
YES		YES		YES	
220mA		220mA		220mA	
YES		YES		YES	
RFI>3V/m / EFT>1KV / ESD>4KV (contact)		RFI>3V/m / EFT>1KV / ESD>4KV (contact)		RFI>3V/m / EFT>1KV / ESD>4KV (contact)	
IEC 60947-5-2,Part 7.4.1 / IEC 60947-5-2,Part 7.4.2		IEC 60947-5-2,Part 7.4.1 / IEC 60947-5-2,Part 7.4.2		IEC 60947-5-2,Part 7.4.1 / IEC 60947-5-2,Part 7.4.2	
EPOXY		EPOXY		EPOXY	
DC13		DC13		DC13	
100 bar		500 bar		350 bar	
PCU1-121.5N-ARU4/138	29	PCU1-D161.5N-A3U2/50	29	PCU1-161.5N-ARU4/73A	29
PCU1-121.5N-BRU4/138	30	PCU1-D161.5N-B3U2/50	30	PCU1-161.5N-BRU4/73A	30
PCU1-121.5P-ARU4/138	31	PCU1-D161.5P-A3U2/50	31	PCU1-161.5P-ARU4/73A	31
PCU1-121.5P-BRU4/138	32	PCU1-D161.5P-B3U2/50	32	PCU1-161.5P-BRU4/73A	32
Installatin: 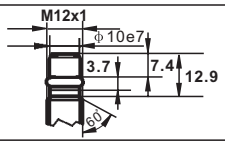		Installatin: 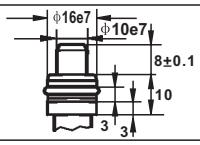		Installatin: 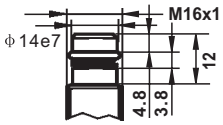	
		4ϕ3x0.34			
Approx.65 g		Approx.100 g		Approx.80 g	

DC HIGH PRESSURE RATED SENSORS

WELD FIELD IMMUNE

M16	M16/ϕ19	M16/M20
●	●	●
1.5 mm	1.5 mm	1.5 mm
SUS 303 stainless steel	SUS 303 stainless steel	SUS 303 stainless steel
○	○	○

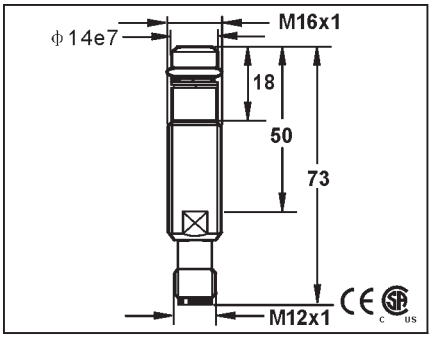

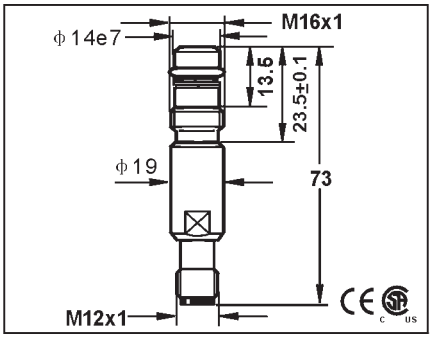

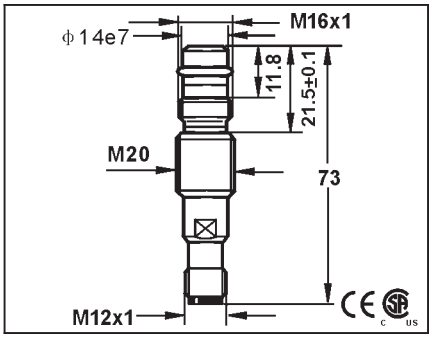

M16	M16/ϕ19	M16/M20
10-30VDC	10-30VDC	10-30VDC
<10%	<10%	<10%
< 10mA	< 10mA	< 10mA
200mA	200mA	200mA
<0.01mA	<0.01mA	<0.01mA
≤ 1.5V	≤ 1.5V	≤ 1.5V
1000Hz	1000Hz	1000Hz
0.2ms/0.2ms	0.2ms/0.2ms	0.2ms/0.2ms
<15%(Sr)	<15%(Sr)	<15%(Sr)
< 1%(Sr)	< 1%(Sr)	< 1%(Sr)
IP 68	IP 68	IP 68
-25...+80°C	-25...+80°C	-25...+80°C
<10%(Sr)	<10%(Sr)	<10%(Sr)
YES	YES	YES
220mA	220mA	220mA
YES	YES	YES
RFI>3V/m / EFT>1KV / ESD>4KV (contact)	RFI>3V/m / EFT>1KV / ESD>4KV (contact)	RFI>3V/m / EFT>1KV / ESD>4KV (contact)
IEC 60947-5-2,Part 7.4.1 / IEC 60947-5-2,Part 7.4.2	IEC 60947-5-2,Part 7.4.1 / IEC 60947-5-2,Part 7.4.2	IEC 60947-5-2,Part 7.4.1 / IEC 60947-5-2,Part 7.4.2
EPOXY	EPOXY	EPOXY
DC13	DC13	DC13
350 bar	350 bar	350 bar

PCU1-161.5N-ARU4/73B	1	PCU1-161.5N-ARU4/D19	29	PCU1-161.5N-ARU4/M20	29
PCU1-161.5N-BRU4/73B	2	PCU1-161.5N-BRU4/D19	30	PCU1-161.5N-BRU4/M20	30
PCU1-161.5P-ARU4/73B	3	PCU1-161.5P-ARU4/D19	31	PCU1-161.5P-ARU4/M20	31
PCU1-161.5P-BRU4/73B	4	PCU1-161.5P-BRU4/D19	32	PCU1-161.5P-BRU4/M20	32

Installatin:

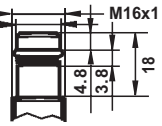

Installatin:

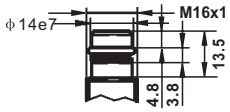

Installatin:

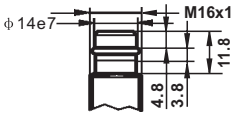

M16	M16/ϕ19	M16/M20
Approx.80 g	Approx.80 g	Approx.80 g

DC HIGH PRESSURE RATED SENSORS

WELD FIELD IMMUNE

M16/M20	M18	M18
●	●	●
2 mm	5 mm	3 mm
SUS 303 stainless steel	SUS 303 stainless steel	SUS 303 stainless steel
○	○	○
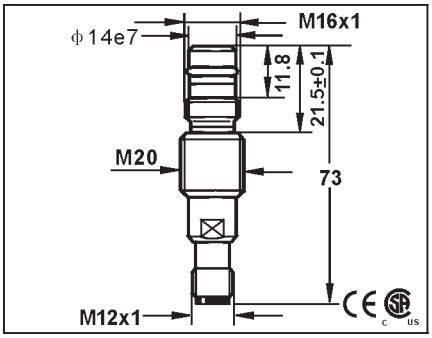	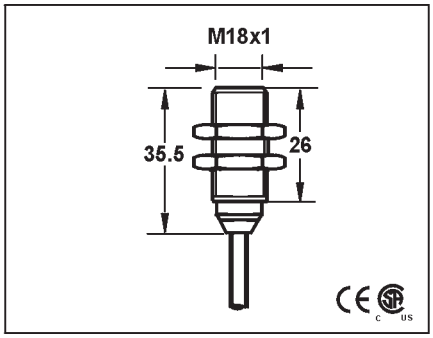	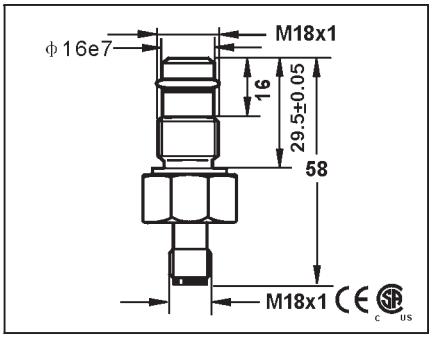
10-30VDC	10-30VDC	10-30VDC
<10%	<10%	<10%
< 10mA	< 10mA	< 10mA
200mA	200mA	200mA
<0.01mA	<0.01mA	<0.01mA
≤ 1.5V	≤ 1.5V	≤ 1.5V
1000Hz	2000Hz	1000Hz
0.2ms/0.2ms	0.1ms/0.1ms	0.2ms/0.2ms
<15%(Sr)	<15%(Sr)	<15%(Sr)
< 1%(Sr)	< 1%(Sr)	< 1%(Sr)
IP 68	IP 68	IP 68
-25...+80°C	-25...+80°C	-25...+80°C
<10%(Sr)	<10%(Sr)	<10%(Sr)
YES	YES	YES
220mA	220mA	220mA
YES	YES	YES
RFI>3V/m / EFT>1KV / ESD>4KV (contact)	RFI>3V/m / EFT>1KV / ESD>4KV (contact)	RFI>3V/m / EFT>1KV / ESD>4KV (contact)
IEC 60947-5-2,Part 7.4.1 / IEC 60947-5-2,Part 7.4.2	IEC 60947-5-2,Part 7.4.1 / IEC 60947-5-2,Part 7.4.2	IEC 60947-5-2,Part 7.4.1 / IEC 60947-5-2,Part 7.4.2
EPOXY	EPOXY	EPOXY
DC13	DC13	DC13
350 bar	10 bar	500 bar

PCU1-1602N-A3U2/M20	29	PCU1-1805N-A3S2/26	1	PCU1-1803N-ARU4/58	29
PCU1-1602N-B3U2/M20	30	PCU1-1805N-B3S2/26	2	PCU1-1803N-BRU4/58	30
PCU1-1602P-A3U2/M20	31	PCU1-1805P-A3S2/26	3	PCU1-1803P-ARU4/58	31
PCU1-1602P-B3U2/M20	32	PCU1-1805P-B3S2/26	4	PCU1-1803P-BRU4/58	32

Installatin: 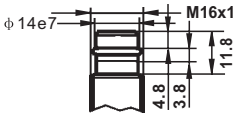		Installatin: 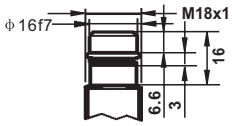
	4ϕ3x0.34	
Approx.90 g	Approx.132 g	Approx.78 g

DC HIGH PRESSURE RATED SENSORS

WELD FIELD IMMUNE

M18	M18	M20
●	●	●
3 mm	1.5 mm	1.0 mm
SUS 303 stainless steel	SUS 303 stainless steel	SUS 303 stainless steel
○	○	○
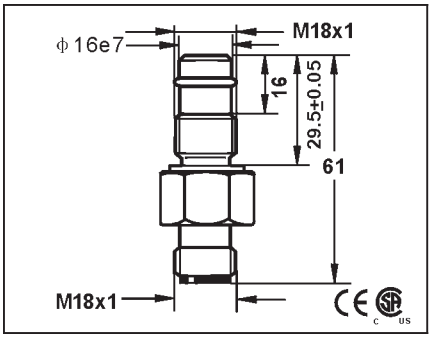	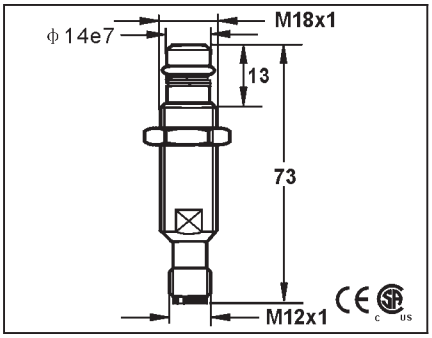	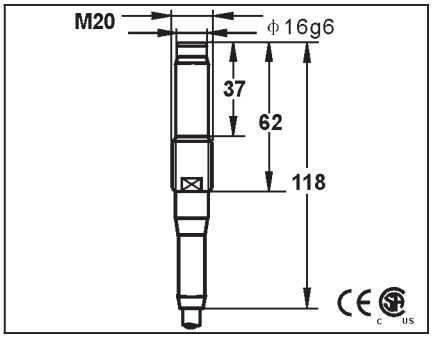
10-30VDC	10-30VDC	10-30VDC
<10%	<10%	<10%
< 10mA	< 10mA	< 10mA
200mA	200mA	200mA
<0.01mA	<0.01mA	<0.01mA
≤ 1.5V	≤ 1.5V	≤ 1.5V
1000Hz	1000Hz	1000Hz
0.2ms/0.2ms	0.2ms/0.2ms	0.2ms/0.2ms
<15%(Sr)	<15%(Sr)	<15%(Sr)
< 1%(Sr)	< 1%(Sr)	< 1%(Sr)
IP 68	IP 68	IP 68
-25...+80°C	-25...+80°C	-25...+80°C
<10%(Sr)	<10%(Sr)	<10%(Sr)
YES	YES	YES
220mA	220mA	220mA
YES	YES	YES
RFI>3V/m / EFT>1KV / ESD>4KV (contact)	RFI>3V/m / EFT>1KV / ESD>4KV (contact)	RFI>3V/m / EFT>1KV / ESD>4KV (contact)
IEC 60947-5-2,Part 7.4.1 / IEC 60947-5-2,Part 7.4.2	IEC 60947-5-2,Part 7.4.1 / IEC 60947-5-2,Part 7.4.2	IEC 60947-5-2,Part 7.4.1 / IEC 60947-5-2,Part 7.4.2
EPOXY	EPOXY	EPOXY
DC13	DC13	DC13
500 bar	350 bar	1500 bar, salttwaer protected
PCU1-1803N-ARU4/61 29	PCU1-D181.5N-ARU4/73 29	PCU1-2001N-A3U2/118 29
PCU1-1803N-B3U2/61 30	PCU1-D181.5N-BRU4/73 30	PCU1-2001N-B3U2/118 30
PCU1-1803P-ARU4/61 31	PCU1-D181.5P-ARU4/73 31	PCU1-2001P-A3U2/118 31
PCU1-1803P-B3U2/61 32	PCU1-D181.5P-BRU4/73 32	PCU1-2001P-B3U2/118 32
Installatin: 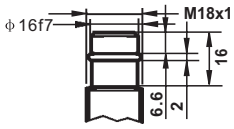	Installatin: 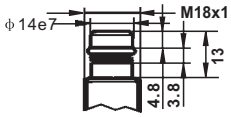	
		4ϕ3x0.34
Approx.80 g	Approx.90 g	Approx.150 g

DC HIGH PRESSURE RATED SENSORS

WELD FIELD IMMUNE

M22	ϕ10mm/ϕ36mm
●	●
3 mm	1.5 mm
SUS 303 stainless steel	SUS 303 stainless steel
○	○
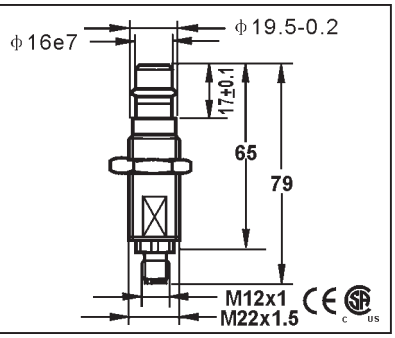	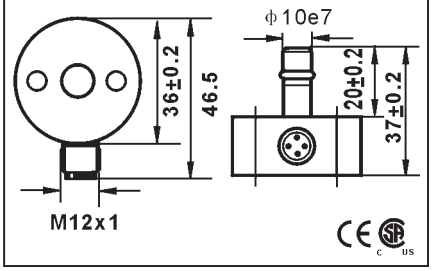
10-30VDC	10-30VDC
<10%	<10%
< 10mA	< 10mA
200mA	200mA
<0.01mA	<0.01mA
≤ 1.5V	≤ 1.5V
1000Hz	1000Hz
0.2ms/0.2ms	0.2ms/0.2ms
<15%(Sr)	<15%(Sr)
< 1%(Sr)	< 1%(Sr)
IP 68	IP 68
-25...+80°C	-25...+80°C
<10%(Sr)	<10%(Sr)
YES	YES
220mA	220mA
YES	YES
RFI>3V/m / EFT>1KV / ESD>4KV (contact)	RFI>3V/m / EFT>1KV / ESD>4KV (contact)
IEC 60947-5-2,Part 7.4.1 / IEC 60947-5-2,Part 7.4.2	IEC 60947-5-2,Part 7.4.1 / IEC 60947-5-2,Part 7.4.2
EPOXY	EPOXY
DC13	DC13
350 bar	350 bar

PCU1-223.0N-A3U2/79	29	PCU1-D101.5N-A3U2/D36	29
PCU1-223.0N-B3U2/79	30	PCU1-D101.5N-B3U2/D36	30
PCU1-223.0P-A3U2/79	31	PCU1-D101.5P-A3U2/D36	31
PCU1-223.0P-B3U2/79	32	PCU1-D101.5P-B3U2/D36	32

Installatin: 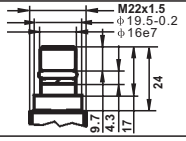	Installatin: 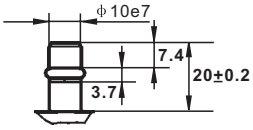
Approx.110 g	Approx.55 g

DC , AC/DC CYLINDICATOR SENSORS

WELD FIELD IMMUNE

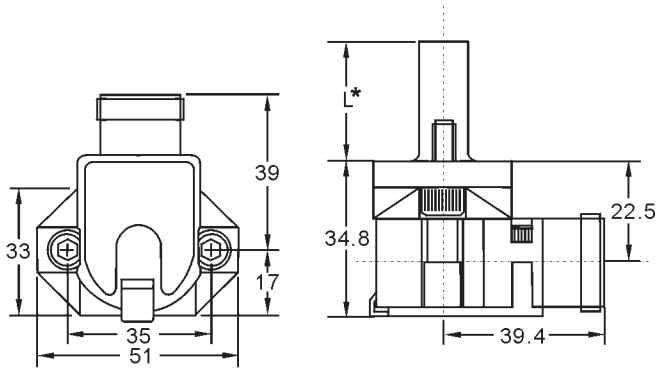

*: PROBE LENGTH

- Weld field and Electrical Noise Immunity
- Standard Latching Short Circuit Protection
- Predictable, Consistent Electrical Performance
- 100% Tested and Burned-in
- Purpose Designed Housings and Materials

● Specification

	AC/DC	DC
Nominal Sensing Range(±10%)	2mm	
Current Consumption	1.7 or 4.5mA	10mA
Voltage Drop	10 VAC	2.0V@100mA
Temperature Drift (Max.)	±10%	
Short Circuit Protection	yes	
Reverse Polarity Protected	yes	
Ambient Temperature Range	- 20°C ~ 70°C	
Maximum Switching Frequency	16Hz	
Hysteresis	3-10%	
Repeatability	<±1.25%	
Protection category	IP 67	
Load Current	5mA to 500mA	200mA max.
Contindous Pressure Rating	3000psi	
LED Indicator	red=power green=target	
EMC	RFI>3V/m / EFT>1KV / ESD>4KV (contact)	
Shock / Vibration	IEC 60947-5-2,Part 7.4.1 / IEC 60947-5-2,Part 7.4.2	
Material Active Face	PBT	
Shipping Weight	340g.	

● Selection Guide

	3-pin Mini		4-pin Mini	4-pin Euro
Voltage	AC/DC 2W,20-230V, NO	AC/DC 2W,20-230V, NO	DC, Sourcing 3W,10-30V, NO	DC,PNP 3W,10-30V, NO
Leakage Current	1.7mA	4.5mA	10 mA	10 mA
Probe Length(mm)	TYPE NUMBER	TYPE NUMBER	TYPE NUMBER	TYPE NUMBER
26.03	MQD2-EE1UO-AZU3C/W/26	MQD2-EE2UO-AZU3C/W/26	MQD2-EE3P1-AZU4C/W/26	MQD2-EE4P1-ARU4C/W/26
31.75	MQD2-EE1UO-AZU3C/W/31	MQD2-EE2UO-AZU3C/W/31	MQD2-EE3P1-AZU4C/W/31	MQD2-EE4P1-ARU4C/W/31
38.10			MQD2-EE3P1-AZU4C/W/38	
44.45			MQD2-EE3P1-AZU4C/W/44	
52.37	MQD2-EE1UO-AZU3C/W/52	MQD2-EE2UO-AZU3C/W/52	MQD2-EE3P1-AZU4C/W/52	MQD2-EE4P1-ARU4C/W/52
73.02	MQD2-EE1UO-AZU3C/W/73	MQD2-EE2UO-AZU3C/W/73	MQD2-EE3P1-AZU4C/W/73	MQD2-EE4P1-ARU4C/W/73
95.88	MQD2-EE1UO-AZU3C/W/95	MQD2-EE2UO-AZU3C/W/95	MQD2-EE3P1-AZU4C/W/95	MQD2-EE4P1-ARU4C/W/95
115.8	MQD2-EE1UO-AZU3C/W/115	MQD2-EE2UO-AZU3C/W/115	MQD2-EE3P1-AZU4C/W/115	MQD2-EE4P1-ARU4C/W/115

● Wiring Diagrams

EURO CONNECTOR MODELS

3 wire DC N.O.

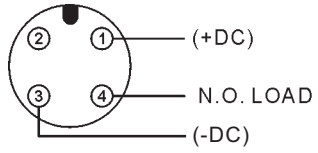

MICRO CONNECTOR MODELS

2 wire AC/DC N.O.

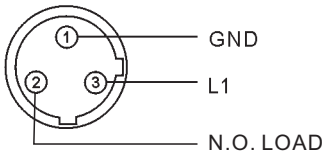

MINI CONNECTOR MODELS

3 wire AC/DC N.O.

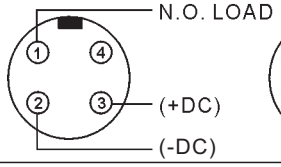
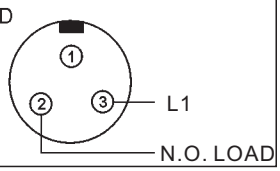
2 wire AC/DC N.O.