PART D-01 ~ D-13

AC INDUCTIVE PROXIMITY SWITCH

Diameter	M 12		M 12		M 12	
● Shielded ○ non-Shielded	●	○	●	○	●	○
Switching Distance Sn mm	2 mm	4 mm	2 mm	4 mm	2 mm	4 mm
Housing Material	stainless steel or nickel plated brass		stainless steel or nickel plated brass		stainless steel or nickel plated brass	
● With LED ○ Without LED	●		●		●	
Dimensions (unit: mm)	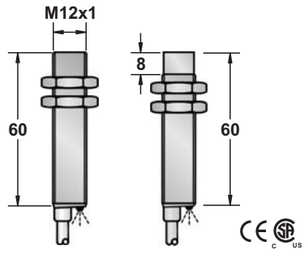		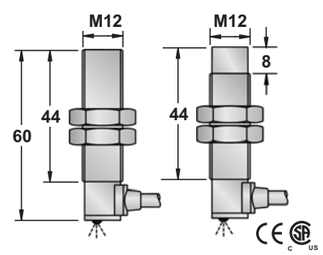		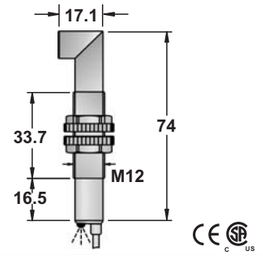	
Operating Voltage	20-250VAC		20-250VAC		20-250VAC	
Ripple	-		-		-	
No Load Current	<1.8mA		<1.8mA		<1.8mA	
Max. Load Current	400mA		400mA		400mA	
Leakge Current	<1.8mA		<1.8mA		<1.8mA	
Surge Current	5A(20ms)		5A(20ms)		5A(20ms)	
Min. Load Current	5mA		5mA		5mA	
Voltage Drop	<8VAC AT 400mA		<8VAC AT 400MA		<8VAC AT 400MA	
Switching Frequency	<25HZ		<25HZ		<25HZ	
Response Time	10ms/10ms		10ms/10ms		10ms/10ms	
Switching Hysteresis	<15%(Sr)		<15%(Sr)		<15%(Sr)	
Repeat Accuracy	<1.0%(Sr)		<1.0%(Sr)		<1.0%(Sr)	
Protection Category	IP67		IP67		IP67	
Operating Temperature	-25 °C - +70 °C		-25 °C - +70 °C		-25 °C - +70 °C	
Temperature Drift	<10%(Sr)		<10%(Sr)		<10%(Sr)	
Short Circuit Protection	NO		NO		NO	
Overload Trip Point	-		-		-	
Time Delay Before Availability	-		-		-	
EMC	RFI>3V/m / EFT>1KV / ESD>4KV (contact)		RFI>3V/m / EFT>1KV / ESD>4KV (contact)		RFI>3V/m / EFT>1KV / ESD>4KV (contact)	
Shock / Vibration	IEC 60947-5-2,Part 7.4.1 / IEC 60947-5-2,Part 7.4.2		IEC 60947-5-2,Part 7.4.1 / IEC 60947-5-2,Part 7.4.2		IEC 60947-5-2,Part 7.4.1 / IEC 60947-5-2,Part 7.4.2	
Material Active Face	POM	PBT	POM	PBT	POM	
DC 3 wire 10-30V NPN N.O.						
DC 3 wire 10-30V NPN N.C.						
DC 3 wire 10-30V PNP N.O.						
DC 3 wire 10-30V PNP N.C.						
DC 4 wire 10-30V Changeover PNP (N.O. & N.C.)						
DC 4 wire 10-30V Changeover NPN (N.O. & N.C.)						
DC 2 wire 10-60V N.O.						
DC 2 wire 10-60V N.C.						
DC 3 wire 10-55v NPN N.O. or NAMUR						
DC 3 wire 10-55v NPN N.C.						
DC 3 wire 10-55v PNP N.O.						
DC 3 wire 10-55v PNP N.C.						
AC 2 wire 20-250V N.O.	FCM1-1202A-A3L2	11 FCM2-1204A-A3L2	FCM1-1202A-A3L2Y	11 FCM2-1204A-A3L2Y	FCM1-1202A-A3L2Z	11 FCM2-1204A-A3L2Z
AC 2 wire 20-250V N.C.	FCM1-1202A-B3L2	12 FCM2-1204A-B3L2	FCM1-1202A-B3L2Y	12 FCM2-1204A-B3L2Y	FCM1-1202A-B3L2Z	12 FCM2-1204A-B3L2Z
AC 2 wire 20-250V N.O. or N.C. Changeable						
AC/DC 2 wire 20-250V N.O.						
AC/DC 2 wire 20-250V N.C.						
AC/DC 2 wire 20-250V N.O. or N.C. Changeable						
Remark						
Cable 2M (PVC)	4 ϕ 3x0.34		4 ϕ 3x0.3 4		4 ϕ 3x0.34	
Weight	Approx.77 g	Approx.76 g	Approx.77 g	Approx.76 g	Approx.77 g	Approx.76 g

AC INDUCTIVE PROXIMITY SWITCH

M 18			M 18			M 18		
●	○		●	○		●	○	
5 mm	8 mm		5 mm	8 mm		5 mm	8 mm	
stainless steel or nickel plated brass			stainless steel or nickel plated brass			stainless steel or nickel plated brass		
●			●			●		
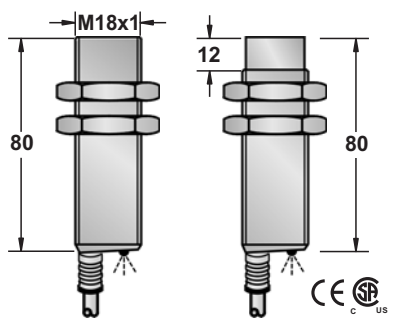			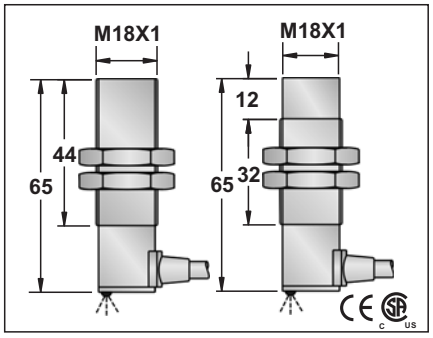			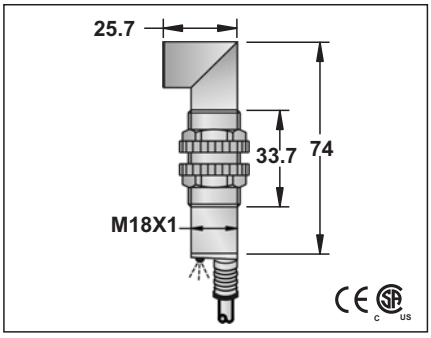		
20-250VAC			20-250VAC			20-250VAC		
-			-			-		
<1.8mA			<1.8mA			<1.8mA		
400mA			400mA			400mA		
<1.8mA			<1.8mA			<1.8mA		
5A(20ms)			5A(20ms)			5A(20ms)		
5mA			5mA			5mA		
<8VAC AT 400MA			<8VAC AT 400MA			<8VAC AT 400MA		
<25HZ			<25HZ			<25HZ		
10ms/10ms			10ms/10ms			10ms/10ms		
<15%(Sr)			<15%(Sr)			<15%(Sr)		
<1.0%(Sr)			<1.0%(Sr)			<1.0%(Sr)		
IP67			IP67			IP67		
-25°C - +70°C			-25°C - +70°C			-25°C - +70°C		
<10%(Sr)			<10%(Sr)			<10%(Sr)		
NO			NO			NO		
-			-			-		
-			-			-		
RFI>3V/m / EFT>1KV / ESD>4KV (contact)			RFI>3V/m / EFT>1KV / ESD>4KV (contact)			RFI>3V/m / EFT>1KV / ESD>4KV (contact)		
IEC 60947-5-2,Part 7.4.1 / IEC 60947-5-2,Part 7.4.2			IEC 60947-5-2,Part 7.4.1 / IEC 60947-5-2,Part 7.4.2			IEC 60947-5-2,Part 7.4.1 / IEC 60947-5-2,Part 7.4.2		
PBT			PBT			PBT		
FCM1-1805A-A3L2	11	FCM2-1808A-A3L2	FCM1-1805A-A3L2Y	11	FCM2-1808A-A3L2Y	FCM1-1805A-A3L2Z	11	FCM2-1808A-A3L2Z
FCM1-1805A-B3L2	12	FCM2-1808A-B3L2	FCM1-1805A-B3L2Y	12	FCM2-1808A-B3L2Y	FCM1-1805A-B3L2Z	12	FCM2-1808A-B3L2Z
FCM1-1805A-C5L2	14	FCM2-1808A-C5L2	FCM1-1805A-C5L2Y	14	FCM2-1808A-C5L2Y	FCM1-1805A-C5L2Z	14	FCM2-1808A-C5L2Z
5.0 ϕ44x0.1			5.0 ϕ44x0.1			5.0 ϕ44x0.1		
Approx.161 g	Approx.160 g		Approx.161 g	Approx.160 g		Approx.161 g	Approx.160 g	

AC INDUCTIVE PROXIMITY SWITCH

M 30		Q25x50x10
●	○	●
10 mm	15 mm	5 mm
stainless steel or nickel plated brass		die-cast
●		●

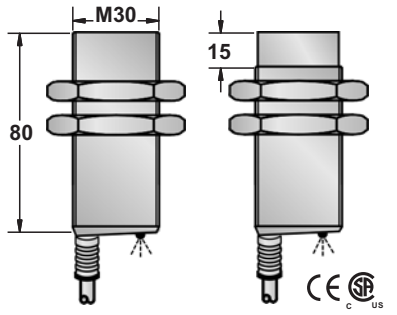

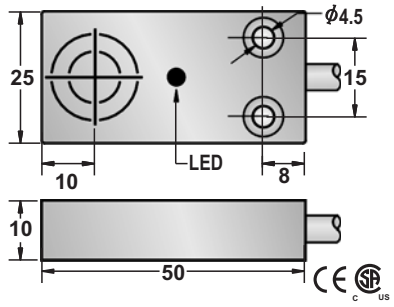

20-250VAC	20-250VAC
-	-
<1.8mA	<1.8mA
400mA	400mA
<1.8mA	<1.8mA
5A(20ms)	5A(20ms)
5mA	5mA
<8VAC at 400MA	<8VAC at 400MA
<25HZ	<25HZ
10ms/10ms	10ms/10ms
<15%(Sr)	<15%(Sr)
<1.0%(Sr)	<1.0%(Sr)
IP67	IP67
-25 °C - +70 °C	-25 °C - +70 °C
<10%(Sr)	<10%(Sr)
NO	NO
-	-
-	-
RFI>3V/m / EFT>1KV / ESD>4KV (contact)	RFI>3V/m / EFT>1KV / ESD>4KV (contact)
IEC 60947-5-2,Part 7.4.1 / IEC 60947-5-2,Part 7.4.2	IEC 60947-5-2,Part 7.4.1 / IEC 60947-5-2,Part 7.4.2
PBT	PBT

FCM1-3010A-A3L2	11	FCM2-3015A-A3L2	FQM1-2505A-A2L2T	11
FCM1-3010A-B3L2	12	FCM2-3015A-B3L2	FQM1-2505A-B2L2T	12
FCM1-3010A-C5L2	14	FCM2-3015A-C5L2		

5.8ϕ3x0.5(6.8ϕ5x0.5)		4ϕ3x0.3 4
Approx.247 g	Approx.237 g	Approx.100 g

AC INDUCTIVE SHORT FORM PROXIMITY SWITCH

M 18		M 30	
●	○	●	○
5 mm	8 mm	10 mm	15 mm
stainless steel or nickel plated brass		stainless steel or nickel plated brass	
●		●	

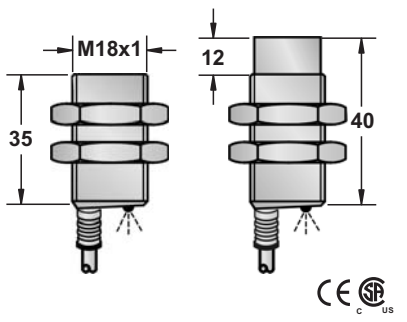

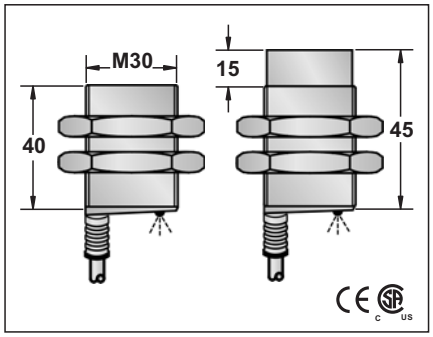

20-250VAC			20-250VAC		
-			-		
<1.8mA			<1.8mA		
400mA			400mA		
<1.8mA			<1.8mA		
5A(20ms)			5A(20ms)		
5mA			5mA		
<8VAC at 400mA			<8VAC at 400MA		
<25HZ			<25HZ		
10ms/10ms			10ms/10ms		
<15%(Sr)			<15%(Sr)		
<1.0%(Sr)			<1.0%(Sr)		
IP67			IP67		
-25°C - +70°C			-25°C - +70°C		
<10%(Sr)			<10%(Sr)		
NO			NO		
-			-		
-			-		
RFI>3V/m / EFT>1KV / ESD>4KV (contact)			RFI>3V/m / EFT>1KV / ESD>4KV (contact)		
IEC 60947-5-2,Part 7.4.1 / IEC 60947-5-2,Part 7.4.2			IEC 60947-5-2,Part 7.4.1 / IEC 60947-5-2,Part 7.4.2		
-			-		
FCM1-1805A-A3S2	11	FCM2-1808A-A3S2	FCM1-3010A-A3S2	11	FCM2-3015A-A3S2
FCM1-1805A-B3S2	12	FCM2-1808A-B3S2	FCM1-3010A-B3S2	12	FCM2-3015A-B3S2
5.0 ϕ 44x0.1			5.8 ϕ 3x0.5		
Approx.156 g		Approx.146 g	Approx.209 g		Approx.208 g

AC INDUCTIVE PLASTIC HOUSING PROXIMITY SWITCH

M 12			M 12			M 12		
●	○		●	○		●	○	
2 mm	4 mm		2 mm	4 mm		2 mm	4 mm	
PBT RESIN			PBT RESIN			PBT RESIN		
●			●			●		
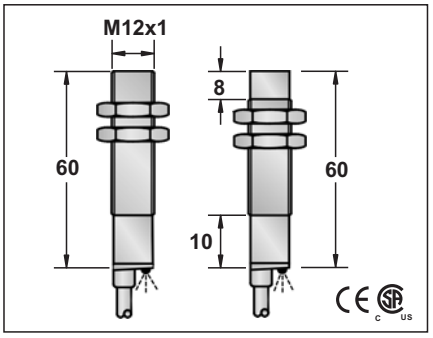			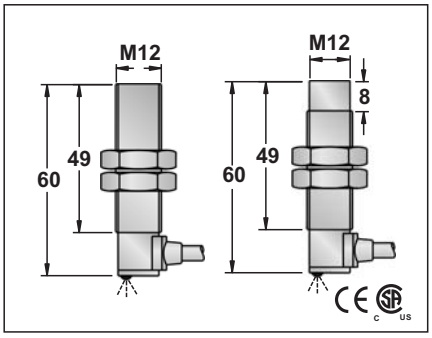			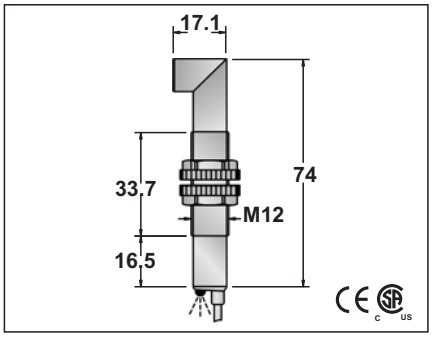		
20-250VAC			20-250VAC			20-250VAC		
-			-			-		
<1.8mA			<1.8mA			<1.8mA		
400mA			400mA			400mA		
<1.8mA			<1.8mA			<1.8mA		
5A(20ms)			5A(20ms)			5A(20ms)		
5mA			5mA			5mA		
<8VAC at 400mA			<8VAC at 400MA			<8VAC at 400MA		
<25HZ			<25HZ			<25HZ		
10ms/10ms			10ms/10ms			10ms/10ms		
<15%(Sr)			<15%(Sr)			<15%(Sr)		
<1.0%(Sr)			<1.0%(Sr)			<1.0%(Sr)		
IP67			IP67			IP67		
-25 °C - +70 °C			-25 °C - +70 °C			-25 °C - +70 °C		
<10%(Sr)			<10%(Sr)			<10%(Sr)		
NO			NO			NO		
-			-			-		
-			-			-		
RFI>3V/m / EFT>1KV / ESD>4KV (contact)			RFI>3V/m / EFT>1KV / ESD>4KV (contact)			RFI>3V/m / EFT>1KV / ESD>4KV (contact)		
IEC 60947-5-2,Part 7.4.1 / IEC 60947-5-2,Part 7.4.2			IEC 60947-5-2,Part 7.4.1 / IEC 60947-5-2,Part 7.4.2			IEC 60947-5-2,Part 7.4.1 / IEC 60947-5-2,Part 7.4.2		
POM		PBT	POM		PBT	POM		
FCP1-1202A-A2L2	9	FCP2-1204A-A2L2	FCP1-1202A-A2L2Y	9	FCP2-1204A-A2L2Y	FCP1-1202A-A2L2Z	9	FCP2-1204A-A2L2Z
FCP1-1202A-B2L2	10	FCP2-1204A-B2L2	FCP1-1202A-B2L2Y	10	FCP2-1204A-B2L2Y	FCP1-1202A-B2L2Z	10	FCP2-1204A-B2L2Z
4ϕ2x0.34			4ϕ2x0.34			4ϕ2x0.34		
Approx.68 g			Approx.68 g			Approx.77 g		

AC INDUCTIVE PLASTIC HOUSING PROXIMITY SWITCH

M 18			M 18			M 18		
●	○		●	○		●	○	
5 mm	8 mm		5 mm	8 mm		5 mm	8 mm	
PBT RESIN			PBT RESIN			PBT RESIN		
●			●			●		
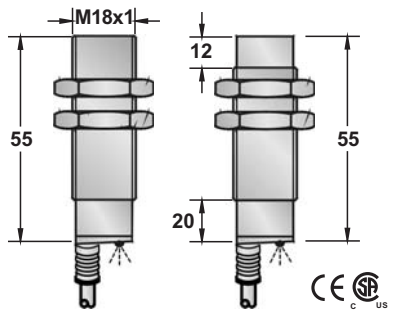			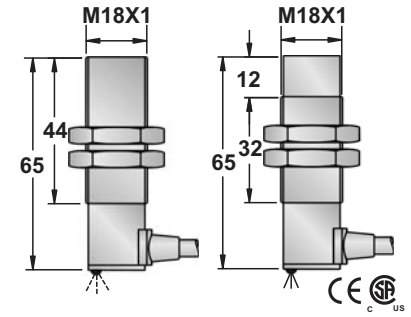			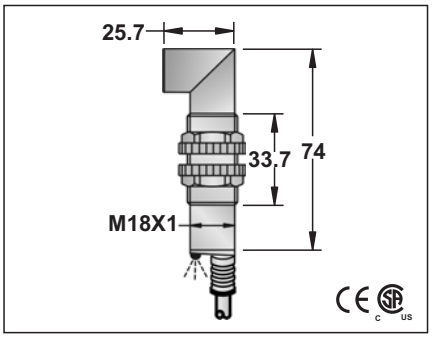		
20-250VAC			20-250VAC			20-250VAC		
-			-			-		
<1.8mA			<1.8mA			<1.8mA		
400mA			400mA			400mA		
<1.8mA			<1.8mA			<1.8mA		
5A(20ms)			5A(20ms)			5A(20ms)		
5mA			5mA			5mA		
<8VAC at 400mA			<8VAC at 400mA			<8VAC at 400mA		
<25HZ			<25HZ			<25HZ		
10ms/10ms			10ms/10ms			10ms/10ms		
<15%(Sr)			<15%(Sr)			<15%(Sr)		
<1.0%(Sr)			<1.0%(Sr)			<1.0%(Sr)		
IP67			IP67			IP67		
-25 °C - +70 °C			-25 °C - +70 °C			-25 °C - +70 °C		
<10%(Sr)			<10%(Sr)			<10%(Sr)		
NO			NO			NO		
-			-			-		
-			-			-		
RFI>3V/m / EFT>1KV / ESD>4KV (contact)			RFI>3V/m / EFT>1KV / ESD>4KV (contact)			RFI>3V/m / EFT>1KV / ESD>4KV (contact)		
IEC 60947-5-2,Part 7.4.1 / IEC 60947-5-2,Part 7.4.2			IEC 60947-5-2,Part 7.4.1 / IEC 60947-5-2,Part 7.4.2			IEC 60947-5-2,Part 7.4.1 / IEC 60947-5-2,Part 7.4.2		
PBT			PBT			PBT		
FCP1-1805A-A2L2	9	FCP2-1808A-A2L2	FCP1-1805A-A2L2Y	9	FCP2-1808A-A2L2Y	FCP1-1805A-A2L2Z	11	FCP2-1808A-A2L2Z
FCP1-1805A-B2L2	10	FCP2-1808A-B2L2	FCP1-1805A-B2L2Y	10	FCP2-1808A-B2L2Y	FCP1-1805A-B2L2Z	12	FCP2-1808A-B2L2Z
5.0φ44x0.1			5.0φ44x0.1			5.0φ44x0.1		
Approx.124 g			Approx.124 g			Approx.124 g		

AC INDUCTIVE PLASTIC H0USING PROXIMITY SWITCH

ϕ20			M 30			ϕ34		
●	○		●	○		●	○	
5 mm	8 mm		10 mm	15 mm		15 mm	20 mm	
PBT RESIN			PBT RESIN			PBT RESIN		
●			●			●		
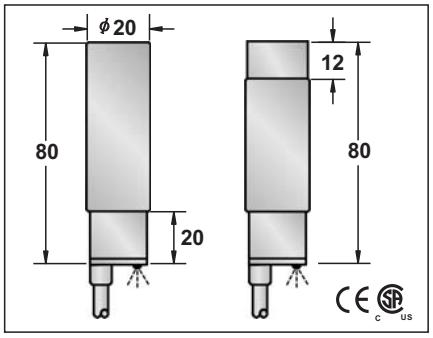			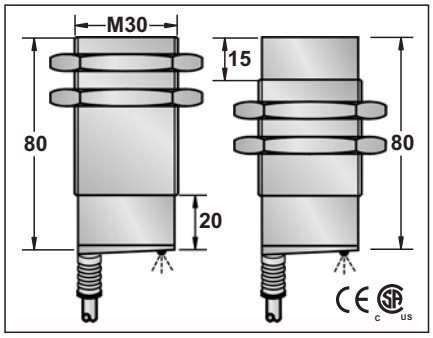			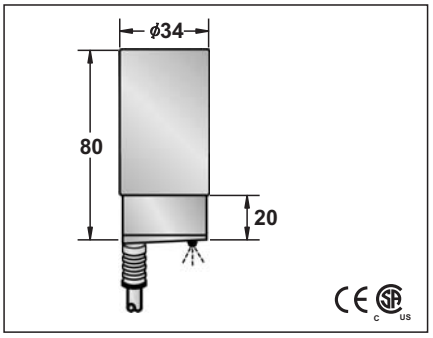		
20-250VAC			20-250VAC			20-250VAC		
-			-			-		
<1.8mA			<1.8mA			<1.8mA		
400mA			400mA			400mA		
<1.8mA			<1.8mA			<1.8mA		
5A(20ms)			5A(20ms)			5A(20ms)		
5mA			5mA			5mA		
<8VAC AT 400MA			<8VAC AT 400MA			<8VAC AT 400MA		
<25HZ			<25HZ			<25HZ		
10ms/10ms			10ms/10ms			10ms/10ms		
<15%(Sr)			<15%(Sr)			<15%(Sr)		
<1.0%(Sr)			<1.0%(Sr)			<1.0%(Sr)		
IP67			IP67			IP67		
-25°C - +70°C			-25°C - +70°C			-25°C - +70°C		
<10%(Sr)			<10%(Sr)			<10%(Sr)		
NO			NO			NO		
-			-			-		
-			-			-		
RFI>3V/m / EFT>1KV / ESD>4KV (contact)			RFI>3V/m / EFT>1KV / ESD>4KV (contact)			RFI>3V/m / EFT>1KV / ESD>4KV (contact)		
IEC 60947-5-2,Part 7.4.1 / IEC 60947-5-2,Part 7.4.2			IEC 60947-5-2,Part 7.4.1 / IEC 60947-5-2,Part 7.4.2			IEC 60947-5-2,Part 7.4.1 / IEC 60947-5-2,Part 7.4.2		
PBT			PBT			PBT		
FCP1-D2005A-A2L2	9	FCP2-D2008A-A2L2	FCP1-3010A-A2L2	9	FCP2-3015A-A2L2	FCP1-D3415A-A2L2	9	FCP2-D3420A-A2L2
FCP1-D2005A-B2L2	10	FCP2-D2008A-B2L2	FCP1-3010A-B2L2	10	FCP2-3015A-B2L2	FCP1-D3415A-B2L2	10	FCP2-D3420A-B2L2
5.8ϕ2x0.5			5.8ϕ2x0.5			5.8 ϕ2x0.5(5.8ϕ4x0.5)		
Approx.153 g			Approx.187 g			Approx.199 g		

AC INDUCTIVE PROXIMITY SWITCH CONNECTOR TYPE

ϕ11		M 12		M 18	
●	○	●	○	●	○
2 mm	4 mm	2 mm	4 mm	5 mm	8 mm
stainless steel or nickel plated brass		stainless steel or nickel plated brass		stainless steel or nickel plated brass	
●		●		●	

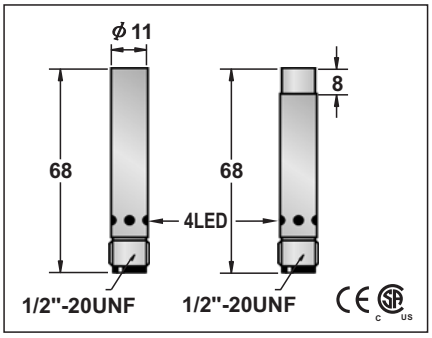

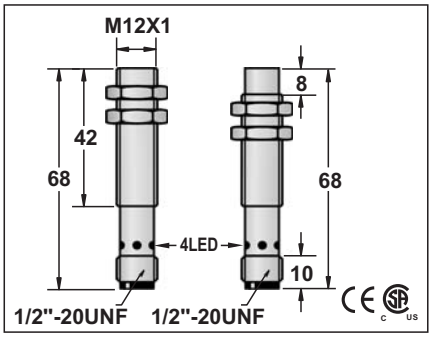

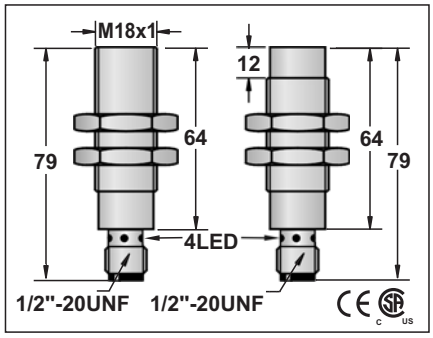

20-250VAC			20-250VAC			20-250VAC	
-			-			-	
<1.8mA			<1.8mA			<1.8mA	
400mA			400mA			400mA	
<1.8mA			<1.8mA			<1.8mA	
5A(20ms)			5A(20ms)			5A(20ms)	
5mA			5mA			5mA	
<8VAC at 200mA			<8VAC at 400MA			<8VAC at 200mA	
<25HZ			<25HZ			<25HZ	
10ms/10ms			10ms/10ms			10ms/10ms	
<15%(Sr)			<15%(Sr)			<15%(Sr)	
<1.0%(Sr)			<1.0%(Sr)			<1.0%(Sr)	
IP67			IP67			IP67	
-25°C - +70°C			-25°C - +70°C			-25°C - +70°C	
<10%(Sr)			<10%(Sr)			<10%(Sr)	
NO			NO			NO	
-			-			-	
-			-			-	
RFI>3V/m / EFT>1KV / ESD>4KV (contact)			RFI>3V/m / EFT>1KV / ESD>4KV (contact)			RFI>3V/m / EFT>1KV / ESD>4KV (contact)	
IEC 60947-5-2,Part 7.4.1 / IEC 60947-5-2,Part 7.4.2			IEC 60947-5-2,Part 7.4.1 / IEC 60947-5-2,Part 7.4.2			IEC 60947-5-2,Part 7.4.1 / IEC 60947-5-2,Part 7.4.2	
PBT			POM		PBT	PBT	
FCM1-D1102A-AUL3	56	FCM2-D1104A-AUL3	FCM1-1202A-AUL3	56	FCM2-1204A-AUL3	FCM1-1805A-AUL3	56	FCM2-1808A-AUL3
FCM1-D1102A-BUL3	56	FCM2-D1104A-BUL3	FCM1-1202A-BUL3	56	FCM2-1204A-BUL3	FCM1-1805A-BUL3	56	FCM2-1808A-BUL3
Approx.30 g		Approx.29 g	Approx.31 g		Approx.30 g	Approx.69 g	Approx.68 g

AC INDUCTIVE PROXIMITY SWITCH CONNECTOR TYPE

M 18		M 18		M 18	
●	○	●	○	●	○
5 mm	8 mm	5 mm	8 mm	5 mm	8 mm
stainless steel or nickel plated brass		stainless steel or nickel plated brass		stainless steel or nickel plated brass	
●		●		●	

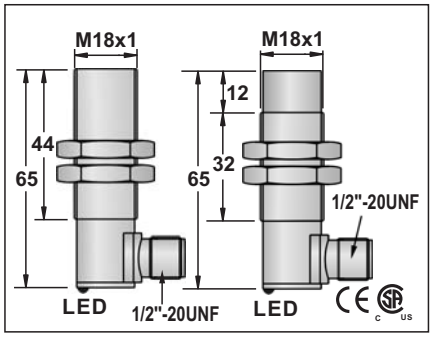

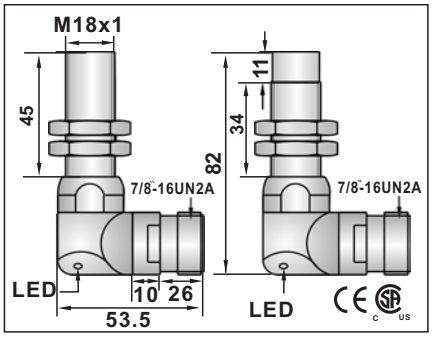

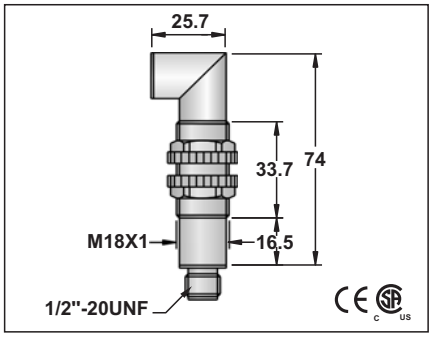

20-250VAC	20-250VAC	20-250VAC
-	-	-
<1.8mA	<1.8mA	<1.8mA
400mA	400mA	400mA
<1.8mA	<1.8mA	<1.8mA
5A(20ms)	5A(20ms)	5A(20ms)
5mA	5mA	5mA
<8VAC AT 400MA	<8VAC AT 400MA	<8VAC AT 400MA
<25HZ	<25HZ	<25HZ
10ms/10ms	10ms/10ms	10ms/10ms
<15%(Sr)	<15%(Sr)	<15%(Sr)
<1.0%(Sr)	<1.0%(Sr)	<1.0%(Sr)
IP67	IP67	IP67
-25°C - +70°C	-25°C - +70°C	-25°C - +70°C
<10%(Sr)	<10%(Sr)	<10%(Sr)
NO	NO	NO
-	-	-
-	-	-
RFI>3V/m / EFT>1KV / ESD>4KV (contact)	RFI>3V/m / EFT>1KV / ESD>4KV (contact)	RFI>3V/m / EFT>1KV / ESD>4KV (contact)
IEC 60947-5-2,Part 7.4.1 / IEC 60947-5-2,Part 7.4.2	IEC 60947-5-2,Part 7.4.1 / IEC 60947-5-2,Part 7.4.2	IEC 60947-5-2,Part 7.4.1 / IEC 60947-5-2,Part 7.4.2
PBT	PBT	PBT

FCM1-1805A-AUL3Y	56	FCM2-1808A-AUL3Y	FCM1-1805A-AZL3Y	56		FCM1-1805A-AUL3Z	56	FCM2-1808A-AUL3Z
FCM1-1805A-BUL3Y	56	FCM2-1808A-BUL3Y	FCM1-1805A-BZL3Y	56		FCM1-1805A-BUL3Z	56	FCM2-1808A-BUL3Z

FCM*-*****-*Z**Y

Z= 7/8-16UN2A
U=1/2-20UNF

Approx.69 g	Approx.68 g	Approx.251 g	Approx.283 g	Approx.69 g	Approx.68 g

AC INDUCTIVE PROXIMITY SWITCH CONNECTOR TYPE

M 30		
●	○	
10 mm	15 mm	
stainless steel or nickel plated brass		
●		
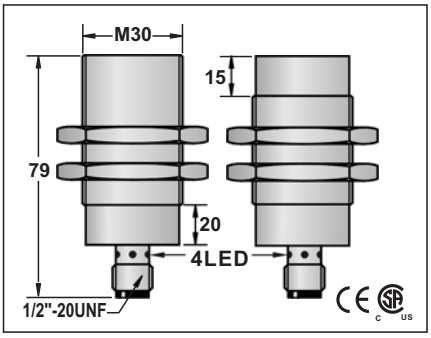		
20-250VAC		
-		
<1.8mA		
400mA		
<1.8mA		
5A(20ms)		
5mA		
<8VAC AT 400MA		
<25HZ		
10ms/10ms		
<15%(Sr)		
<1.0%(Sr)		
IP67		
-25°C - +70°C		
<10%(Sr)		
NO		
-		
-		
RFI>3V/m / EFT>1KV / ESD>4KV (contact)		
IEC 60947-5-2,Part 7.4.1 / IEC 60947-5-2,Part 7.4.2		
PBT		
FCM1-3010A-AUL3	56	FCM2-3015A-AUL3
FCM1-3010A-BUL3	56	FCM2-3015A-BUL3
Approx.147 g	Approx.137 g	

M 30		
●	○	
10 mm	15 mm	
stainless steel or nickel plated brass		
●		
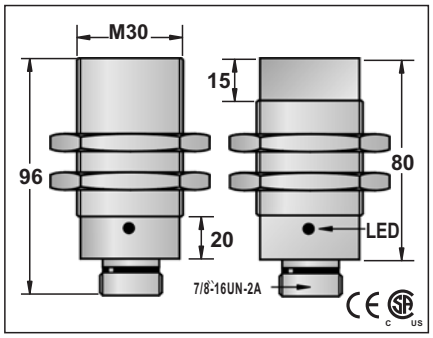		
20-250VAC		
-		
<1.8mA		
400mA		
<1.8mA		
5A(20ms)		
5mA		
<8VAC AT 400MA		
<25HZ		
10ms/10ms		
<15%(Sr)		
<1.0%(Sr)		
IP67		
-25°C - +70°C		
<10%(Sr)		
NO		
-		
-		
RFI>3V/m / EFT>1KV / ESD>4KV (contact)		
IEC 60947-5-2,Part 7.4.1 / IEC 60947-5-2,Part 7.4.2		
PBT		
FCM1-3010A-AZL3	65	FCM2-3015A-AZL3
FCM1-3010A-BZL3	65	FCM2-3015A-BZL3
Approx.187 g	Approx.179 g	

M 30		
●	○	
10 mm	15 mm	
stainless steel or nickel plated brass		
●		
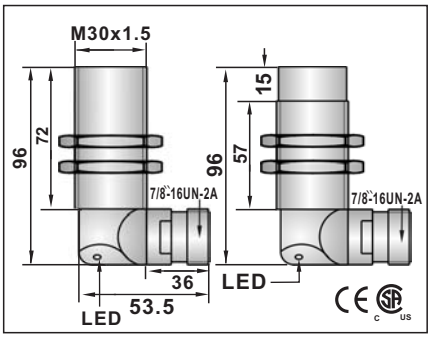		
20-250VAC		
-		
<1.8mA		
400mA		
<1.8mA		
5A(20ms)		
5mA		
<8VAC AT 400MA		
<25HZ		
10ms/10ms		
<15%(Sr)		
<1.0%(Sr)		
IP67		
-25°C - +70°C		
<10%(Sr)		
NO		
-		
-		
RFI>3V/m / EFT>1KV / ESD>4KV (contact)		
IEC 60947-5-2,Part 7.4.1 / IEC 60947-5-2,Part 7.4.2		
PBT		
FCM1-3010A-AZL3Y	65	FCM2-3015A-AZL3Y
FCM1-3010A-BZL3Y	65	FCM2-3015A-BZL3Y
Approx.311 g	Approx.356 g	

FCM*-*****-*Z**Y

Z= 7/8`-16UN2A
U=1/2`-20UNF

AC INDUCTIVE PLASTIC HOUSING PROXIMITY SWITCH CONNECTOR TYPE

M 12			M 18			M 18		
●	○		●	○		●	○	
2 mm	4 mm		5 mm	8 mm		5 mm	8 mm	
PBT RESIN			PBT RESIN			PBT RESIN		
●			●			●		
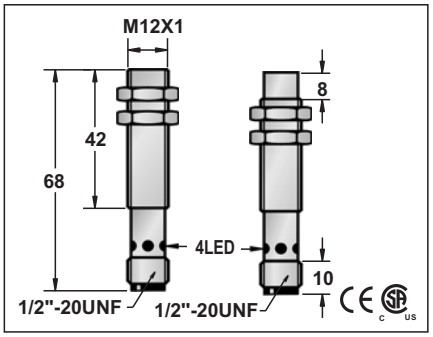			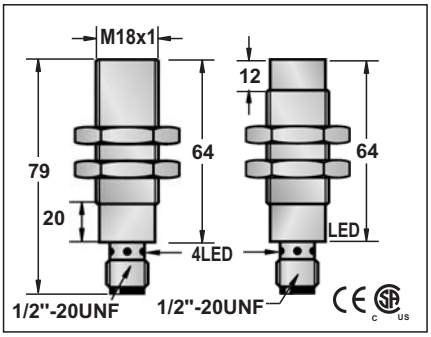			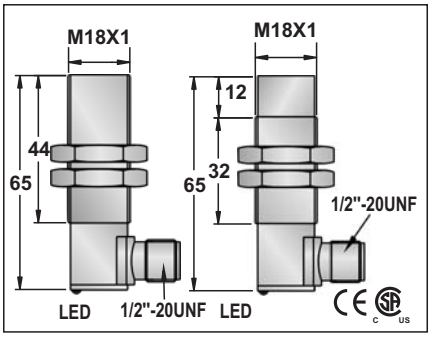		
20-250VAC			20-250VAC			20-250VAC		
-			-			-		
<1.8mA			<1.8mA			<1.8mA		
400mA			400mA			400mA		
<1.8mA			<1.8mA			<1.8mA		
5A(20ms)			5A(20ms)			5A(20ms)		
5mA			5mA			5mA		
<8VAC AT 400MA			<8VAC AT 400MA			<8VAC AT 400MA		
<25HZ			<25HZ			<25HZ		
10ms/10ms			10ms/10ms			10ms/10ms		
<15%(Sr)			<15%(Sr)			<15%(Sr)		
<1.0%(Sr)			<1.0%(Sr)			<1.0%(Sr)		
IP67			IP67			IP67		
-25 °C - +70 °C			-25 °C - +70 °C			-25 °C - +70 °C		
<10%(Sr)			<10%(Sr)			<10%(Sr)		
NO			NO			NO		
-			-			-		
-			-			-		
RFI>3V/m / EFT>1KV / ESD>4KV (contact)			RFI>3V/m / EFT>1KV / ESD>4KV (contact)			RFI>3V/m / EFT>1KV / ESD>4KV (contact)		
IEC 60947-5-2,Part 7.4.1 / IEC 60947-5-2,Part 7.4.2			IEC 60947-5-2,Part 7.4.1 / IEC 60947-5-2,Part 7.4.2			IEC 60947-5-2,Part 7.4.1 / IEC 60947-5-2,Part 7.4.2		
POM		PBT	PBT			PBT		
FCP1-1202A-AUL3	58	FCP2-1204A-AUL3	FCP1-1805A-AUL3	58	FCP2-1808A-AUL3	FCP1-1805A-AUL3Y	58	FCP2-1808A-AUL3Y
FCP1-1202A-BUL3	58	FCP2-1204A-BUL3	FCP1-1805A-BUL3	58	FCP2-1808A-BUL3	FCP1-1805A-BUL3Y	58	FCP2-1808A-BUL3Y
Approx.14 g			Approx.80 g			Approx.80 g		

AC INDUCTIVE PLASTIC HOUSING PROXIMITY SWITCH CONNECTOR TYPE

M 18		ϕ20		M 30	
●	○	●	○	●	○
5 mm	8 mm	8 mm	12 mm	10 mm	15 mm
PBT RESIN		PBT RESIN		PBT RESIN	
●		●		●	

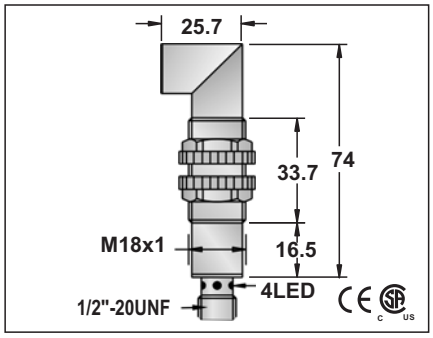

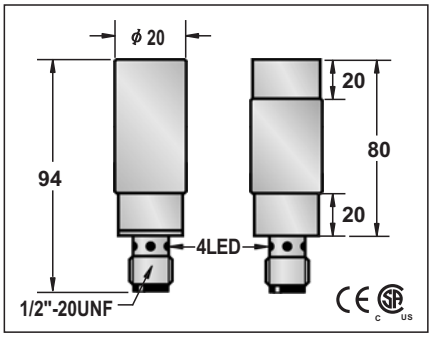

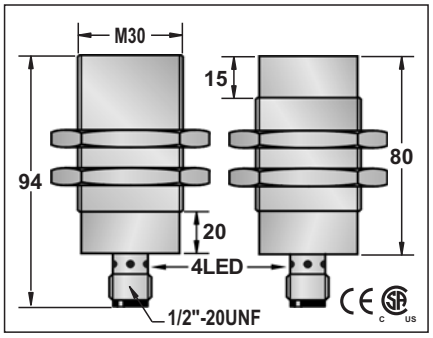

M 18	ϕ20	M 30
20-250VAC	20-250VAC	20-250VAC
-	-	-
<1.8mA	<1.8mA	<1.8mA
400mA	400mA	400mA
<1.8mA	<1.8mA	<1.8mA
5A(20ms)	5A(20ms)	5A(20ms)
5mA	5mA	5mA
<8VAC AT 400MA	<8VAC AT 400MA	<8VAC AT 400MA
<25HZ	<25HZ	<25HZ
10ms/10ms	10ms/10ms	10ms/10ms
<15%(Sr)	<15%(Sr)	<15%(Sr)
<1.0%(Sr)	<1.0%(Sr)	<1.0%(Sr)
IP67	IP67	IP67
-25 °C - +70 °C	-25 °C - +70 °C	-25 °C - +70 °C
<10%(Sr)	<10%(Sr)	<10%(Sr)
NO	NO	NO
-	-	-
-	-	-
RFI>3V/m / EFT>1KV / ESD>4KV (contact)	RFI>3V/m / EFT>1KV / ESD>4KV (contact)	RFI>3V/m / EFT>1KV / ESD>4KV (contact)
IEC 60947-5-2,Part 7.4.1 / IEC 60947-5-2,Part 7.4.2	IEC 60947-5-2,Part 7.4.1 / IEC 60947-5-2,Part 7.4.2	IEC 60947-5-2,Part 7.4.1 / IEC 60947-5-2,Part 7.4.2
PBT	PBT	PBT

M 18			ϕ20			M 30		
FCP1-1805A-AUL3Z	58	FCP2-1808A-AUL3Z				FCP1-3010A-AUL3	58	FCP2-3015A-AUL3
FCP1-1805A-BUL3Z	58	FCP2-1808A-BUL3Z				FCP1-3010A-BUL3	58	FCP2-3015A-BUL3

M 18	ϕ20	M 30
Approx.14 g	Approx.90 g	Approx.120 g